380 Pacific Street
San Luis Obispo, CA 93401
Phone: (408) 963-5710

Addendum No. 02

File No. 40-39 **Date:** 8/19/2026
DSA Appl. No. 03-125585

Project: **Dana Elementary New Classrooms**
920 W. Tefft Street
Nipomo, CA, 93444
Lucia Mar Unified School District

LMUSD Project #: 0606
LMUSD Bid No. 27-01

1. This Addendum shall supersede all previously issued Contract Documents wherein it modifies same. All other conditions of the Contract remain unchanged. The following changes, additions, or deletions as set forth herein shall apply to the Contract Documents and shall be made a part thereof and shall be subject to all the requirements thereof as though originally shown and/or specified.

2. Bidders shall acknowledge receipt of this Addendum on Bid Form.

3. SPECIFICATION REVISIONS

   1. Section 03 30 00 – Cast in Place Concrete
      ADD the section entirely.

   2. Section 08 80 00 – Glass Glazing
      REPLACE the section with the attached revised document.

4. DRAWING REVISIONS

   Item 4.1 Reference Civil Sheets:

   C2 – Demolition Plan
   C3 – Demolition Plan
   C8 – Utility Plan
   C9 – Utility Plan
   C11 – Civil Details

   REPLACE: Entire Sheet with attached sheets.

   Item 4.2 Reference Architectural Sheets:

   T1.1 – Title Sheet
   A0.30 – Site Details
   A3.1 – Reflected Ceiling Plan
   A4.1 - Roof plan
   A9.4 – Roof Details

   REPLACE: Entire Sheet with attached sheets.

Item 4.3 Reference Structural Sheets:

S0.3 – Structural Specifications
S2.1 – Foundation Plan
S2.3 – Roof Framing Plan
S2.4 – Structural Elevations
S2.5 – Structural Elevations
S3.2 – Structural Details

REPLACE: Entire Sheet with attached sheets.

5. CLARIFICATIONS

See attached RFIs with responses.

6. ATTACHMENTS

Specifications:

03 30 00 – Cast in Place Concrete (8 pages)
08 80 00 – Glass Glazing (10 pages)

RFI Responses

RFIs with responses. (23 pages)

Drawings:

Civil:

C2 – Demolition Plan
C3 – Demolition Plan
C8 – Utility Plan
C9 – Utility Plan
C11 – Civil Details

Architectural:

T1.1 – Title Sheet
A0.30 – Site Details
A3.1 – Reflected Ceiling Plan
A4.1 - Roof plan
A9.4 – Roof Details

Structural:

S0.3 – Structural Specifications
S2.1 – Foundation Plan
S2.3 – Roof Framing Plan
S2.4 – Structural Elevations
S2.5 – Structural Elevations
S3.2 – Structural Details

LICENSED ARCHITECT
MARK C. FINNEY
NO. C-24673
REN. 9-30-27
STATE OF CALIFORNIA

END OF ADDENDUM No. 02

SECTION 03 30 00 – CAST-IN-PLACE CONCRETE

PART 1 - GENERAL

1.01 SUMMARY

A. Work Includes: Cast-in-place concrete construction, including formwork, reinforcement, concrete materials, mixture design, placement, finishing, and curing for the structural concrete elements shown on the Drawings, including foundations, pad footings, continuous footings, gradebeams, tie beams, and piers; structural slabs; and building slabs-on-grade.

B. This Section does not include utility trench backfill, curbs and gutters, sidewalks, walkways, driveways, roadways, parking lots, or other exterior flatwork and pavement. See Divisions 31 and 32.

1.02 RELATED DOCUMENTS AND ORDER OF PRECEDENCE

A. The Contract Documents, including the structural Drawings and the sheet specifications thereon (Sheets S0.1 General Notes, S0.2 and S0.3 Structural Specifications, prepared by T&S Structural), govern in conjunction with this Section.

B. Where a requirement of this Section and a requirement of the structural Drawings differ, the more stringent requirement governs, consistent with the General Notes on Sheet S0.1, unless specifically directed otherwise by the Structural Engineer of Record. Structural design values, member sizes, reinforcement, embedments, and tolerances shown on the Drawings govern the structural design.

C. The Contractor shall initiate resolution of any conflict within or between the Drawings and this Section by written RFI prior to performing the affected work.

1.03 QUALITY ASSURANCE

A. Installer Qualifications: Use an adequate number of skilled workers thoroughly trained and experienced in the necessary crafts and completely familiar with the specified requirements and the methods needed for proper performance of the work of this Section.

B. Manufacturer Qualifications: A firm experienced in manufacturing ready-mixed concrete products that complies with ASTM C94 requirements for production facilities and equipment.

C. Special Inspection and Testing: Inspection and testing of the building subgrade and of the concrete construction shall be performed in accordance with CBC Chapter 17A, and DSA IR/Form DSA-103. The special inspector(s) and testing laboratory are retained by the District (Owner), not by the Contractor. Refer to Article 3.10 and to the Project Notes (DSA) on Sheet S0.3.

D. Pre-Installation Conference: Before placing concrete, convene a pre-installation (pre-pour) conference at the Project site. Attendees shall include the Contractor, concrete subcontractor, ready-mix producer, reinforcing installer, testing/special-inspection agency, the Geotechnical Engineer of Record, and, at their option, the Architect and Structural Engineer of Record. Review mixture designs, placement and finishing procedures, curing and hot/cold-weather provisions,

joint and sawcut layout, vapor-retarder protection, and required inspections. Record and distribute meeting minutes.

E. Comply with the references listed in Article 1.04; when an edition (year) is not listed, comply with the edition adopted for this Project by the enforcing agency (DSA).

1.04 REFERENCES

A. ACI 301 – Specifications for Structural Concrete.

B. ACI 302.1R – Guide for Concrete Floor and Slab Construction.

C. ACI 117 – Specification for Tolerances for Concrete Construction and Materials.

D. ACI 318 – Building Code Requirements for Structural Concrete (edition adopted by the applicable CBC).

E. ACI 306.1 – Specification for Cold-Weather Concreting; ACI 308.1 – Specification for Curing Concrete.

F. ASTM E1155 – Standard Test Method for Determining FF Floor Flatness and FL Floor Levelness Numbers.

G. ASTM standards for materials and testing as referenced herein (C33, C94, C150, C171, C260, C309, C494, C595, C618, C1017, C1315, E1745, E1643, and others as applicable).

H. ACI Field Reference Manual, SP-15; Concrete Reinforcing Steel Institute (CRSI) Manual of Standard Practice; Portland Cement Association (PCA) cement and concrete standards.

I. 2022 California Building Code (CBC), Title 24, with amendments for DSA/SS.

J. Geotechnical Report(s): “Updated Geotechnical Engineering and Geologic Hazards Report” for Dana Elementary School by Earth Systems Pacific, dated May 06, 2025, File No. 301260-005; including all subsequent letters and addenda (the “Geotechnical Report” or “Soils Report”).

1.05 SUBMITTALS

A. Comply with the submittal procedures of Division 01.

B. Product Data: For each manufactured product, including cement, supplementary cementitious materials, admixtures, curing materials, vapor retarder, joint materials, and grout.

C. Design Mixtures: For each concrete mixture, with supporting laboratory trial-batch or field test data and documentation of proportioning in accordance with ACI 301 and ACI 318, including water-cementitious materials ratio, supplementary cementitious material percentages, admixtures, slump, and air content.

D. Reinforcement Shop Drawings: Placing drawings, bar lists, and bending schedules per CRSI and ACI 318; mill certificates and material certifications for reinforcing steel, welded reinforcement, and mechanical couplers.

E. Proposed Control-Joint / Sawcut Layout: Submit a proposed layout of slab contraction (control) joints and sawcuts for review and approval by the Architect, coordinated with the Structural Engineer of Record and the Geotechnical Engineer. Layout shall conform to Article 3.04 and to the control-joint spacing shown on Sheet S1.1; final locations and configuration are subject to Architect approval.

F. Proposed Finishes: Submit proposed floor and formed-surface finishes to the Architect and Owner for approval, coordinated with the architectural finish schedule.

G. Pre-Installation Conference minutes; hot- and cold-weather concreting plans when placement is anticipated outside the temperature limits of ACI 301 / ACI 306.1.

PART 2 - PRODUCTS

2.01 FORM-FACING MATERIALS

A. Smooth-Formed Finished Concrete: Form-facing panels that provide continuous, true, and smooth surfaces; furnish in the largest practicable sizes to minimize joints.

B. Rough-Formed Finished Concrete: Plywood, lumber, metal, or other approved material; lumber dressed on at least two edges and one side for tight fit.

2.02 STEEL REINFORCEMENT

A. Reinforcing Bars (not to be welded): ASTM A615, deformed, clean, free of rust:

1. #3 bars and smaller: Grade 40 or 60.

2. #4 bars and larger: Grade 60.

B. Reinforcing Bars (to be welded): ASTM A706, deformed, clean, free of rust; weld per AWS D1.4 with special inspection per DSA-103:

1. #3 bars and smaller: Grade 40 or 60.

2. #4 bars and larger: Grade 60.

C. Epoxy-Coated Bars (where indicated): ASTM A775.

D. Mechanical Couplers: As shown on the Drawings (Dayton Superior Bar-Lock S- or L-series, or approved equal per ICC-ES ESR-2495); stagger adjacent couplers 2 feet minimum.

E. Bar Supports and Fabrication: Per CRSI Manual of Standard Practice.

2.03 CONCRETE MATERIALS

A. Cement: ASTM C150, Type II, low-alkali.

B. Supplementary Cementitious Materials (SCM): Class F fly ash (ASTM C618) not to exceed 25%, and/or ground-granulated blast-furnace slag cement (ASTM C989, Grade 100 or 120) not to exceed 50%, as a partial replacement for Portland cement, proportioned and documented in accordance with ACI 318 and approved by the Structural Engineer of Record. Slag cement shall

not be used in concrete permanently exposed to public view. Higher SCM replacement is permitted only where justified by an approved alternative method with supporting mixture testing.

C. Aggregates:

1. ASTM C33, graded, normal weight; coarse aggregate shall be crushed rock.

2. Maximum nominal size: 1-1/2 inch at footings; 1 inch at all other work.

3. Reduce the maximum aggregate size as required by ACI 318 Section 25.2.1 so that it does not exceed any of the following:

a. 1/5 the narrowest dimension between sides of forms;

b. 1/3 the least depth (thickness) of slab;

c. 3/4 the minimum clear spacing between reinforcing bars, ducts, or conduits;

d. 3/4 the clear space between reinforcement and forms.

4. Conform to CBC Chapter 19A.

D. Water: ASTM C94, clean and free of deleterious amounts of acids, salts, alkali, and organic materials.

E. Chemical Admixtures: Certified by the manufacturer to be compatible and to not contribute water-soluble chloride ions exceeding those permitted in hardened concrete. Do not use calcium chloride or admixtures containing calcium chloride. Admixtures, when used, shall conform to:

1. Water-Reducing Admixture: ASTM C494, Type A.

2. Retarding Admixture: ASTM C494, Type B.

3. Water-Reducing and Retarding Admixture: ASTM C494, Type D.

4. Plasticizing and Retarding Admixture: ASTM C1017, Type II.

5. Air-Entraining Admixture: ASTM C260.

2.04 VAPOR RETARDER

A. Under interior building slabs-on-grade scheduled to receive moisture-sensitive floor coverings, provide an ASTM E1745, Class A vapor retarder (Raven “VaporBlock VB 15,” Fortifiber “Moistop Ultra 15,” or approved equal), with manufacturer's accessories, seam tape, and pipe boots. Coordinate with the Geotechnical Report and architectural finish schedule.

2.05 CURING MATERIALS

A. Evaporation Retarder: Waterborne, monomolecular film-forming, for application to fresh concrete.

B. Curing Compound: ASTM C309, Type 1 or 1-D, compatible with scheduled floor coverings and adhesives. Curing-and-Sealing Compound: ASTM C1315, where scheduled for slabs exposed to view.

2.06 RELATED MATERIALS

A. Non-Shrink Grout: 5,000 psi minimum (Five Star Products, Quikrete, or approved equal), “plastic” consistency, installed per manufacturer's requirements.

B. Expansion / Isolation Joint Filler: ASTM D1751 or D1752. Contraction-Joint Filler: two-component semi-rigid epoxy, minimum Shore A 80 per ASTM D2240.

C. Anchor Bolts / Rods: ASTM F1554 Grade 36 or ASTM A307, hex-headed, hot-dip galvanized per ASTM A153 or stainless where exposed to weather, soil, or moisture. Adhesive and expansion anchors only where specifically detailed and approved for cracked concrete (Simpson AT-3G, ICC-ES ESR-5026; Simpson Strong-Bolt 2, ICC-ES ESR-3037; or approved equal), installed with required special inspection.

2.07 CONCRETE MIXTURES

A. Proportion each mixture per ACI 301 and ACI 318 on the basis of laboratory trial mixture or field test data, normal weight.

B. Normal-Weight Concrete (consistent with Sheet S0.2):

1. Compressive Strength, minimum: 3,000 psi at 28 days (or higher where indicated on the Drawings).

2. Water-Cementitious Materials Ratio, maximum: 0.50 for slabs, walls, and columns; 0.55 for foundations.

3. Slump: 5 inches maximum (per ACI 301; a water-reducing admixture may be used to increase workability without increasing water).

4. Air Content: 3 percent, max.

C. Ready-Mixed Concrete: Measure, batch, mix, and deliver per ASTM C94 with batch tickets. When air temperature is 85–90 °F, reduce mixing and delivery time from 90 to 75 minutes; above 90 °F, reduce to 60 minutes.

PART 3 - EXECUTION

3.01 FORMWORK

A. Design, erect, shore, brace, and maintain formwork per ACI 301 for all applicable loads until the structure can support such loads.

B. Construct formwork so that concrete members are of the size, shape, alignment, elevation, and position indicated, within the tolerance limits of ACI 117. Remove formwork per ACI 301 and ACI 318 (and per the form-removal periods on Sheet S0.2).

3.02 VAPOR RETARDER INSTALLATION

A. Place, protect, and repair vapor retarders per ASTM E1745, the Geotechnical Report, and manufacturer's instructions. Lap and seal joints; provide pipe boots. Do not puncture; repair and reseal before placing concrete.

3.03 STEEL REINFORCEMENT PLACEMENT

A. Place per CRSI Manual of Standard Practice. Reinforcing clearances (cover): 3 inches against earth; 2 inches against formed surfaces, existing concrete, or top of concrete; 1-1/2 inches elsewhere; except where dimensioned otherwise on the Drawings. Do not “wet-set” bars (ACI 318 Section 26.6.2.2).

3.04 JOINTS

A. Construct joints true to line with faces perpendicular to the concrete surface. Locate construction joints as indicated and as approved by the Structural Engineer of Record; roughen to approximately 1/4-inch amplitude, wire-brush, clean, and dampen before placing adjacent concrete.

B. Contraction (Control) Joints in Slabs: Form weakened-plane joints, sectioning slabs into approximately square areas not exceeding a 1.5:1 length-to-width ratio, per ACI and PCA recommendations and the spacing shown on Sheet S1.1. Provide tooled or sawed joints as indicated; saw early, before random cracking. Install per the approved control-joint/sawcut layout submittal (Article 1.05.E). The Architect's requirements for final joint locations govern.

C. Isolation Joints: Install joint-filler strips at slab junctions with vertical surfaces as indicated.

3.05 CONCRETE PLACEMENT

A. Verify formwork, reinforcement, embedded items, and required inspections are complete before placing. Deposit concrete to avoid segregation and consolidate with mechanical vibration per ACI 301.

B. Floor Slabs: Comply with ACI 302.1R for placement. Where concrete is placed directly on the vapor retarder, adjust placement and curing accordingly.

C. Cold-Weather Placement: Comply with ACI 306.1. Hot-Weather Placement: Comply with ACI 301. Maintain concrete above 50 °F and moist for at least the first 7 days (10 days minimum for Type II cement per ACI 308).

3.06 FINISHING FORMED SURFACES

A. Concrete exposed to public view: smooth-formed finish, repaired and patched, fins and projections removed. Concrete not exposed to view: rough-formed or smooth-formed finish. Strike off and finish related unformed surfaces to match adjacent formed surfaces. The Architect's finish requirements govern.

3.07 FINISHING FLOORS AND SLABS

A. Comply with ACI 302.1R for screeding, restraightening, floating, troweling, and finishing.

B. Provide the following finishes, coordinated with the architectural finish schedule:

1. Steel-troweled finish at interior slabs scheduled to receive resilient flooring, tile, or to be exposed/sealed.

2. Float or light broom finish at slabs scheduled to receive thick-set assemblies or where slip resistance is required, per the finish schedule.

3.08 FLOOR FLATNESS AND LEVELNESS TOLERANCES

A. Unless flatter values are required by the architectural finish schedule, a floor-covering manufacturer, or Paragraph B below, floors shall be constructed to a conventional troweled tolerance, determined in accordance with ASTM E1155 and ACI 117 / ACI 302.1R: Specified Overall Values FF 20 / FL 15 and Minimum Local Values FF 12 / FL 9 (Minimum Local Values are 60 percent of the Specified Overall Values, per ACI 117).

B. FL (levelness) is specified only for level slabs-on-ground and shall be measured within 72 hours of placement, before removal of supporting forms or shoring. FL does not apply to surfaces sloped to drain or to unshored elevated slabs; specify FF only for those.

C. Accessibility: Notwithstanding the tolerances above, accessible routes, landings, and floor surfaces shall comply with the applicable slope, cross-slope, and surface requirements of CBC Chapter 11B. Accessibility requirements govern where more restrictive.

3.09 CURING AND PROTECTION

A. General: Protect freshly placed concrete from premature drying and excessive cold or hot temperatures. Comply with ACI 306.1 for cold-weather protection and ACI 301 for hot-weather protection during curing. Maintain concrete above 50 °F and in a moist condition for at least the first 7 days after placement.

B. Evaporation Retarder: Apply to unformed surfaces when hot, dry, or windy conditions cause moisture loss approaching 0.2 lb/sq ft/hr, before and during finishing operations, per manufacturer's written instructions.

C. Cure concrete in accordance with ACI 308.1 by one or a combination of the following methods, for not less than 7 days:

1. Moisture Curing: Keep surfaces continuously moist for not less than 7 days.

2. Moisture-Retaining-Cover Curing: Cover surfaces with moisture-retaining cover in the widest practicable width, with sides and ends lapped and sealed by waterproof tape or adhesive; immediately repair holes or tears during the curing period.

3. Curing Compound (ASTM C309): Apply uniformly in a continuous operation by power spray or roller per manufacturer's written instructions; recoat areas subject to heavy rainfall within three hours of initial application; maintain and repair the coating during the curing period. Do not use where it would interfere with bonding of scheduled floor coverings unless the manufacturer certifies compatibility.

4. Curing-and-Sealing Compound (ASTM C1315): For interior slabs permanently exposed to public view or where scheduled, apply uniformly to floors and slabs in a continuous operation by power spray or roller per manufacturer's written instructions; recoat areas subject to heavy rainfall within three hours; apply a second coat 24 hours later; maintain and repair the coating during the curing period.

3.10 FIELD QUALITY CONTROL

A. Special inspection and testing of concrete construction shall be performed under CBC Chapter 17A and DSA-103, as delineated in the Statement of Special Inspections. The special inspector(s) and testing laboratory are retained and paid by the District (Owner); a certified special inspector shall be employed by the District and approved by the Architect and Engineer of Record, consistent with the Project Notes (DSA) on Sheet S0.3.

B. Batch-plant inspection per CBC Chapter 17A, except where waived. Tests per ACI 301 and CBC Chapter 17A.

C. The Contractor shall protect the work to maintain finishes until final completion. Repair or replace defective concrete to the approval of the Owner, Architect, Engineer, or DSA, at no additional cost to the Owner.

D. Geotechnical sign-offs: Before the DSA foundation inspection, the Geotechnical Engineer shall confirm in writing that the building pad, foundation excavations, soil properties, and bearing capacity conform to the Geotechnical Report and the design parameters on the Drawings, and shall inspect and sign off grading and excavations prior to placement of forms, reinforcing, or concrete.

END OF SECTION

SECTION 08 81 00 – GLASS GLAZING

PART 1 - GENERAL

1.1 RELATED DOCUMENTS

A. Drawings and general provisions of the Contract, including General and Supplementary Conditions and Division 1 Specification Sections, apply to this Section.

1.2 SUMMARY

A. This Section includes glazing for the following products and applications, including those specified in other Sections where glazing requirements are specified by reference to this Section:

1. Windows.

B. Related Sections include the following:

1. Division 8 Section "Windows."

2. Division 8 Section “Hollow Metal Doors”.

1.3 DEFINITIONS

A. Manufacturers of Glass Products: Firms that produce primary glass, fabricated glass, or both, as defined in referenced glazing publications.

B. Glass Thicknesses: Indicated by thickness designations in millimeters according to ASTM C 1036.

C. Interspace: Space between lites of an insulating-glass unit that contains dehydrated air or a specified gas.

D. Deterioration of Coated Glass: Defects developed from normal use that are attributed to the manufacturing process and not to causes other than glass breakage and practices for maintaining and cleaning coated glass contrary to manufacturer's written instructions. Defects include peeling, cracking, and other indications of deterioration in metallic coating.

E. Deterioration of Insulating Glass: Failure of hermetic seal under normal use that is attributed to the manufacturing process and not to causes other than glass breakage and practices for maintaining and cleaning insulating glass contrary to manufacturer's written instructions. Evidence of failure is the obstruction of vision by dust, moisture, or film on interior surfaces of glass.

1.4 PERFORMANCE REQUIREMENTS

A. General: Provide glazing systems capable of withstanding normal thermal movement and wind and impact loads (where applicable) without failure, including loss or glass breakage attributable to the following: defective manufacture, fabrication, and installation; failure of sealants or

gaskets to remain watertight and airtight; deterioration of glazing materials; or other defects in construction.

B. Glass Design: Glass thickness designations indicated are minimums and are for detailing only. Confirm glass thicknesses by analyzing Project loads and in-service conditions. Provide glass lites in the thickness designations indicated for various size openings, but not less than thicknesses and in strengths (annealed or heat treated) required to meet or exceed the following criteria:

1. Glass Thicknesses: Select minimum glass thicknesses to comply with ASTM E 1300. according to the following requirements.

C. Thermal Movements: Provide glazing that allows for thermal movements resulting from the following maximum change (range) in ambient and surface temperatures acting on glass framing members and glazing components. Base engineering calculation on surface temperatures of materials due to both solar heat gain and nighttime-sky heat loss.

1. Temperature Change (Range): 120 deg F, ambient; 180 deg F, material surfaces.

1.5 SUBMITTALS

A. Product Data: For each glass product and glazing material indicated.

B. Samples: For the following products, in the form of 12-inch- square Samples for glass.

1. Each color of tinted float glass.
2. Coated vision glass.
3. Insulating glass for each designation indicated.
4. For each color (except black) of exposed glazing sealant indicated.

C. Product Certificates: Signed by manufacturers of glass and glazing products certifying that products furnished comply with requirements.

1. For solar-control low-e-coated glass, provide documentation demonstrating that manufacturer of coated glass is certified by coating manufacturer.

D. Qualification Data: For installers.

E. Preconstruction Adhesion and Compatibility Test Report: From glazing sealant manufacturer indicating glazing sealants were tested for adhesion to glass and glazing channel substrates and for compatibility with glass and other glazing materials.

F. Product Test Reports: For each of the following types of glazing products:

1. Tinted float glass.
2. Coated float glass.
3. Insulating glass.
4. Glazing sealants.
5. Glazing gaskets.

G. Warranties: Special warranties specified in this Section.

1.6 QUALITY ASSURANCE

A. Installer Qualifications: An experienced installer who has completed glazing similar in material, design, and extent to that indicated for this Project; whose work has resulted in glass installations with a record of successful in-service performance; and who employs glass installers for this Project who are certified under the National Glass Association Glazier Certification Program as Level 2 (Senior Glaziers) or Level 3 (Master Glaziers).

B. Source Limitations for Glazing Accessories: Obtain glazing accessories through one source from a single manufacturer for each product and installation method indicated.

C. Glass Product Testing: Obtain glass test results for product test reports in "Submittals" Article from a qualified testing agency based on testing glass products.

1. Glass Testing Agency Qualifications: An independent testing agency with the experience and capability to conduct the testing indicated, as documented according to ASTM E 548.

D. Elastomeric Glazing Sealant Product Testing: Obtain sealant test results for product test reports in "Submittals" Article from a qualified testing agency based on testing current sealant formulations within a 36-month period.

1. Sealant Testing Agency Qualifications: An independent testing agency qualified according to ASTM C 1021 to conduct the testing indicated, as documented according to ASTM E 548.
2. Test elastomeric glazing sealants for compliance with requirements specified by reference to ASTM C 920, and where applicable, to other standard test methods.

E. Safety Glazing Products:

1. Comply with testing requirements in CPSC 16 CFR Part 1201.
2. Identify each pane of safety glazing with a manufacturer’s designation specifying who applied the designation, the manufacturer or installer, and the safety glazing standard with which it complies per 2022 CBC Section 2406.3. Designation shall be acid etched, sand blasted, ceramic fired, laser etched, embossed, or of a type that once applied, cannot be removed without being destroyed.

F. Insulating-Glass Certification Program: Permanently marked either on spacers or on at least one component lite of units with appropriate certification label of the following testing and inspecting agency:

1. Insulating Glass Certification Council.
2. Associated Laboratories, Inc.

G. Preinstallation Conference: Conduct conference at Project site to comply with requirements in Division 1.

1.7 DELIVERY, STORAGE, AND HANDLING

A. Protect glazing materials according to manufacturer's written instructions and as needed to prevent damage to glass and glazing materials from condensation, temperature changes, direct exposure to sun, or other causes.

1.8 PROJECT CONDITIONS

A. Environmental Limitations: Do not proceed with glazing when ambient and substrate temperature conditions are outside limits permitted by glazing material manufacturers and when glazing channel substrates are wet from rain, frost, condensation, or other causes.

1.9 WARRANTY (Project Close-Out Item)

A. Manufacturer's Special Warranty for Coated-Glass Products: Manufacturer's standard form, made out to Owner and signed by coated-glass manufacturer agreeing to replace coated-glass units that deteriorate as defined in "Definitions" Article, f.o.b. the nearest shipping point to Project site, within specified warranty period indicated below.

1. Warranty Period: 10 years from date of Substantial Completion.

B. Manufacturer's Special Warranty on Insulating Glass: Manufacturer's standard form, made out to Owner and signed by insulating-glass manufacturer agreeing to replace insulating-glass units that deteriorate as defined in "Definitions" Article, f.o.b. the nearest shipping point to Project site, within specified warranty period indicated below.

1. Warranty Period: 10 years from date of Substantial Completion.

PART 2 - PRODUCTS

2.1 MANUFACTURERS

A. In other Part 2 articles where titles below introduce lists, the following requirements apply to product selection:

1. Products: Subject to compliance with requirements, provide one of the products specified, or preapproved equal.
2. Manufacturers: One of the following for each glass type:

1) Viracon, Inc.
2) Vitro Architectural Glass
3) Andersen Windows (for total unit performance).

2.2 GLASS PRODUCTS

A. Annealed Float Glass: ASTM C 1036, Type I (transparent flat glass), Quality-Q3; of class indicated.

1. Ultra-Clear (Low-Iron) Float Glass: Class I (clear); with a minimum 91 percent visible light transmission and a minimum solar heat gain coefficient of 0.87.

B. Heat-Treated Float Glass: ASTM C 1048; Type I (transparent flat glass); Quality-Q3; of class, kind, and condition indicated.

1. Provide Kind HS (heat-strengthened) float glass in place of annealed float glass where needed to resist thermal stresses induced by differential shading of individual glass lites and to comply with glass design requirements specified in Part 1 "Performance Requirements" Article.
2. For uncoated glass, comply with requirements for Condition A.
3. For coated vision glass, comply with requirements for Condition C (other uncoated glass).
4. Provide Kind FT (fully tempered) float glass in place of annealed or Kind HS (heat-strengthened) float glass where safety glass is indicated.

C. Insulating-Glass Units, General: Factory-assembled units consisting of sealed lites of glass separated by a dehydrated interspace and complying with ASTM E 774 for Class CBA units and with requirements specified in this Article and in Part 2 "Insulating-Glass Units" Article.

1. Provide Kind FT (fully tempered) glass lites where safety glass is indicated.
2. Overall Unit Thickness and Thickness of Each Lite: Dimensions indicated for insulating-glass units are nominal and the overall thicknesses of units are measured perpendicularly from outer surfaces of glass lites at unit's edge.
3. Sealing System: Dual seal, with primary and secondary sealants as follows:

   a. Manufacturer's standard sealants.
   b. Polyisobutylene and polysulfide.
   c. Polyisobutylene and silicone.
   d. Polyisobutylene and hot-melt butyl.

4. Spacer Specifications: Manufacturer's standard spacer material and construction complying with the following requirements:

   a. Spacer Material: Aluminum with mill or clear anodic finish or Galvanized steel.
   b. Spacer bar to be bronze color where visible.
   c. Desiccant: Molecular sieve or silica gel, or blend of both.
   d. Corner Construction: Manufacturer's standard corner construction.

5. Interspace gas type:

   a. Argon.

6. Tinted glass:

   a. Shall be “Graylite II” glass as per district standard.

2.3 GLASS AND GLAZING TYPES

A. Type A: 1 inch Insulated Glass with 1/2 inch air space – Low E
Design requirements: Overall U-factor 0.25, Overall SHGC 0.2, Overall VT 0.5

1. Exterior Sheet: 1/4 inch
2. Interior sheet: 1/4 inch

B. Type B: 1 inch Tempered Insulated Glass with 1/2 inch air space – Low E (Safety Glazing – see Quality Assurance section for identification requirements)
Design requirement: Overall U-factor 0.25, Overall SHGC 0.2, Overall VT 0.5

1. Exterior Sheet: 1/4 inch tempered
2. Interior sheet: 1/4 inch tempered

2.4 GLAZING SEALANTS

A. General: Provide products of type indicated, complying with the following requirements:

1. Compatibility: Select glazing sealants that are compatible with one another and with other materials they will contact, including glass products, seals of insulating-glass units, and glazing channel substrates, under conditions of service and application, as demonstrated by sealant manufacturer based on testing and field experience.
2. Suitability: Comply with sealant and glass manufacturers' written instructions for selecting glazing sealants suitable for applications indicated and for conditions existing at time of installation.
3. Colors of Exposed Glazing Sealants: As selected by Architect from manufacturer's full range.

B. One Part Silicone-Rubber Glazing Sealant (SR-GS): Elastomeric silicone sealant complying with FS TT-S-001543, Class A, non-sag. Provide acid type recommended by manufacturer where only nonporous bond surfaces are contacted; provide non acid type recommended by manufacturer where one or more porous bond surfaces are contacted.

C. One Part Polysulfide Glazing Sealant (1Ps-GS): Polysulfide elastomeric sealant complying with FS TT-S-00230, Class A, Type II; Compounded specifically for exterior exposed glazing.

D. One Part Acrylic Glazing Sealant (1Ac-GS): Thermo-plastic acrylic terpolymer, complying with FS TT-S-00230, Class B, Type II: solids of 95% acrylic.

E. Preformed Butyl Rubber Glazing Sealant (PBuR-GS): Compound of polymerized butyl rubber and inert fillers, with or without polyisobutylene modification, solvent-based, 95% solids, formed and coiled on release paler; tack free in 24 hours, paintable, nonstaining; plain, preshimmed or reinforced as required for proper installation and setting of glass.

F. Glazing Sealants for Fire-Resistive Glazing Products: Identical to products used in test assemblies to obtain fire-protection rating.

2.5 GLAZING GASKETS

A. Vinyl Foam Glazing Tape (VF-GT): Closed cell, flexible, self-adhesive, non-extruding, polyvinyl chloride foam tape; recommended by manufacturer for exterior, exposed, watertight installation of glass, with only nominal pressure in the glazing channel; comply with ASTM D 1667.

2.6 MISCELLANEOUS GLAZING MATERIALS

A. General: Provide products of material, size, and shape complying with referenced glazing standard, requirements of manufacturers of glass and other glazing materials for application indicated, and with a proven record of compatibility with surfaces contacted in installation.

B. Cleaners, Primers, and Sealers: Types recommended by sealant or gasket manufacturer.

C. Setting Blocks: Elastomeric material with a Shore, Type A durometer hardness of 85, plus or minus 5.

D. Spacers: Elastomeric blocks or continuous extrusions with a Shore, Type A durometer hardness required by glass manufacturer to maintain glass lites in place for installation indicated.

E. Edge Blocks: Elastomeric material of hardness needed to limit glass lateral movement (side walking).

F. Cylindrical Glazing Sealant Backing: ASTM C 1330, Type O (open-cell material), of size and density to control glazing sealant depth and otherwise produce optimum glazing sealant performance.

G. Perimeter Insulation for Fire-Resistive Glazing: Identical to product used in test assembly to obtain fire-resistance rating.

2.7 FABRICATION OF GLAZING UNITS

A. Fabricate glazing units in sizes required to glaze openings indicated for Project, with edge and face clearances, edge and surface conditions, and bite complying with written instructions of product manufacturer and referenced glazing publications, to comply with system performance requirements.

B. Clean-cut or flat-grind vertical edges of butt-glazed monolithic lites in a manner that produces square edges with slight kerfs at junctions with outdoor and indoor faces.

C. Grind smooth and polish exposed glass edges and corners.

PART 3 - EXECUTION

3.1 EXAMINATION

A. Examine framing glazing, with Installer present, for compliance with the following:

1. Manufacturing and installation tolerances, including those for size, squareness, and offsets at corners.
2. Presence and functioning of weep system.
3. Minimum required face or edge clearances.
4. Effective sealing between joints of glass-framing members.

B. Proceed with installation only after unsatisfactory conditions have been corrected.

3.2 PREPARATION

A. Clean glazing channels and other framing members receiving glass immediately before glazing. Remove coatings not firmly bonded to substrates.

3.3 GLAZING, GENERAL

A. Comply with combined written instructions of manufacturers of glass, sealants, gaskets, and other glazing materials, unless more stringent requirements are indicated, including those in referenced glazing publications.

B. Glazing channel dimensions, as indicated on Drawings, provide necessary bite on glass, minimum edge and face clearances, and adequate sealant thicknesses, with reasonable tolerances. Adjust as required by Project conditions during installation.

C. Protect glass edges from damage during handling and installation. Remove damaged glass from Project site and legally dispose of off Project site. Damaged glass is glass with edge damage or other imperfections that, when installed, could weaken glass and impair performance and appearance.

D. Apply primers to joint surfaces where required for adhesion of sealants, as determined by preconstruction sealant-substrate testing.

E. Install setting blocks in sill rabbets, sized and located to comply with referenced glazing publications, unless otherwise required by glass manufacturer. Set blocks in thin course of compatible sealant suitable for heel bead.

F. Do not exceed edge pressures stipulated by glass manufacturers for installing glass lites.

G. Provide spacers for glass lites where length plus width is larger than 50 inches as follows:

1. Locate spacers directly opposite each other on both inside and outside faces of glass. Install correct size and spacing to preserve required face clearances, unless gaskets and glazing tapes are used that have demonstrated ability to maintain required face clearances and to comply with system performance requirements.
2. Provide 1/8-inch minimum bite of spacers on glass and use thickness equal to sealant width. With glazing tape, use thickness slightly less than final compressed thickness of tape.

H. Provide edge blocking where indicated or needed to prevent glass lites from moving sideways in glazing channel, as recommended in writing by glass manufacturer and according to requirements in referenced glazing publications.

I. Set glass lites in each series with uniform pattern, draw, bow, and similar characteristics.

3.4 TAPE GLAZING

A. Position tapes on fixed stops so that, when compressed by glass, their exposed edges are flush with or protrude slightly above sightline of stops.

B. Install tapes continuously, but not necessarily in one continuous length. Do not stretch tapes to make them fit opening.

C. Cover vertical framing joints by applying tapes to heads and sills first and then to jambs. Cover horizontal framing joints by applying tapes to jambs and then to heads and sills.

D. Place joints in tapes at corners of opening with adjoining lengths butted together, not lapped. Seal joints in tapes with compatible sealant approved by tape manufacturer.

E. Do not remove release paper from tape until just before each glazing unit is installed.

F. Apply heel bead of elastomeric sealant, where indicated.

G. Center glass lites in openings on setting blocks and press firmly against tape by inserting dense compression gaskets formed and installed to lock in place against faces of removable stops. Start gasket applications at corners and work toward centers of openings.

H. Apply cap bead of elastomeric sealant over exposed edge of tape.

3.5 SEALANT GLAZING

A. Install continuous spacers, or spacers combined with cylindrical sealant backing, between glass lites and glazing stops to maintain glass face clearances and to prevent sealant from extruding into glass channel and blocking weep systems until sealants cure. Secure spacers or spacers and backings in place and in position to control depth of installed sealant relative to edge clearance for optimum sealant performance.

B. Force sealants into glazing channels to eliminate voids and to ensure complete wetting or bond of sealant to glass and channel surfaces.

C. Tool exposed surfaces of sealants to provide a substantial wash away from glass.

3.6 CLEANING AND PROTECTION

A. Protect exterior glass from damage immediately after installation by attaching crossed streamers to framing held away from glass. Do not apply markers to glass surface. Remove nonpermanent labels, and clean surfaces.

B. Protect glass from contact with contaminating substances resulting from construction operations, including weld splatter. If, despite such protection, contaminating substances do come into contact with glass, remove substances immediately as recommended by glass manufacturer.

C. Examine glass surfaces adjacent to or below exterior concrete and other masonry surfaces at frequent intervals during construction, but not less than once a month, for buildup of dirt, scum, alkaline deposits, or stains; remove as recommended in writing by glass manufacturer.

D. Remove and replace glass that is broken, chipped, cracked, or abraded or that is damaged from natural causes, accidents, and vandalism, during construction period.

E. Wash glass on both exposed surfaces in each area of Project not more than four days before date scheduled for inspections that establish date of Substantial Completion. Wash glass as recommended in writing by glass manufacturer.

END OF SECTION 08 81 00

This page intentionally left blank.

PRE-BID CLARIFICATION FORM (For Contractor's Use)

PROJECT NAME:	Dana Elementary 6 Classrooms		
PROJECT NUMBER:	0606		
		EMAIL:	prebidquestions@lmusd.org

DATE:	**7/22/2026**		
FROM:	**Butch Pope Engineering**	EMAIL:	**estimator@butchpopeconstruction.com**
DOCUMENT/DIVISION NUMBER:	**02-41-13**	DRAWING NUMBER:	**C-2**

REQUESTED CLARIFICATION:

Drawing C-2, General Note No. 2 states: "Remove Existing Play Structures, Curbs, and Surfacing."

Please confirm that the existing play structures are intended to be removed and disposed of as part of the demolition scope, and that no salvage, stockpiling, or delivery to the Owner is required. While it is understood that the existing curbs and surfacing are to be demolished and disposed of, clarification is requested regarding the disposition requirements for the play structures to ensure the bid includes the appropriate scope of work.

RESPONSE TO CLARIFICATION:

The existing play structures shall be removed and disposed of as part of the demolition scope. No salvage, stockpiling, or delivery to the Owner is required.

Attach additional numbered sheets as necessary; however, only one (1) request shall be contained on each submitted form.

QUESTION #1

Question #1:

Note #2 States to "Remove Existing Playground Equipment, Curbs, and Surface". I would assume the curbs and surface will be removed & disposed of but can it be confirmed that the Play Structures do not need to be salvaged.

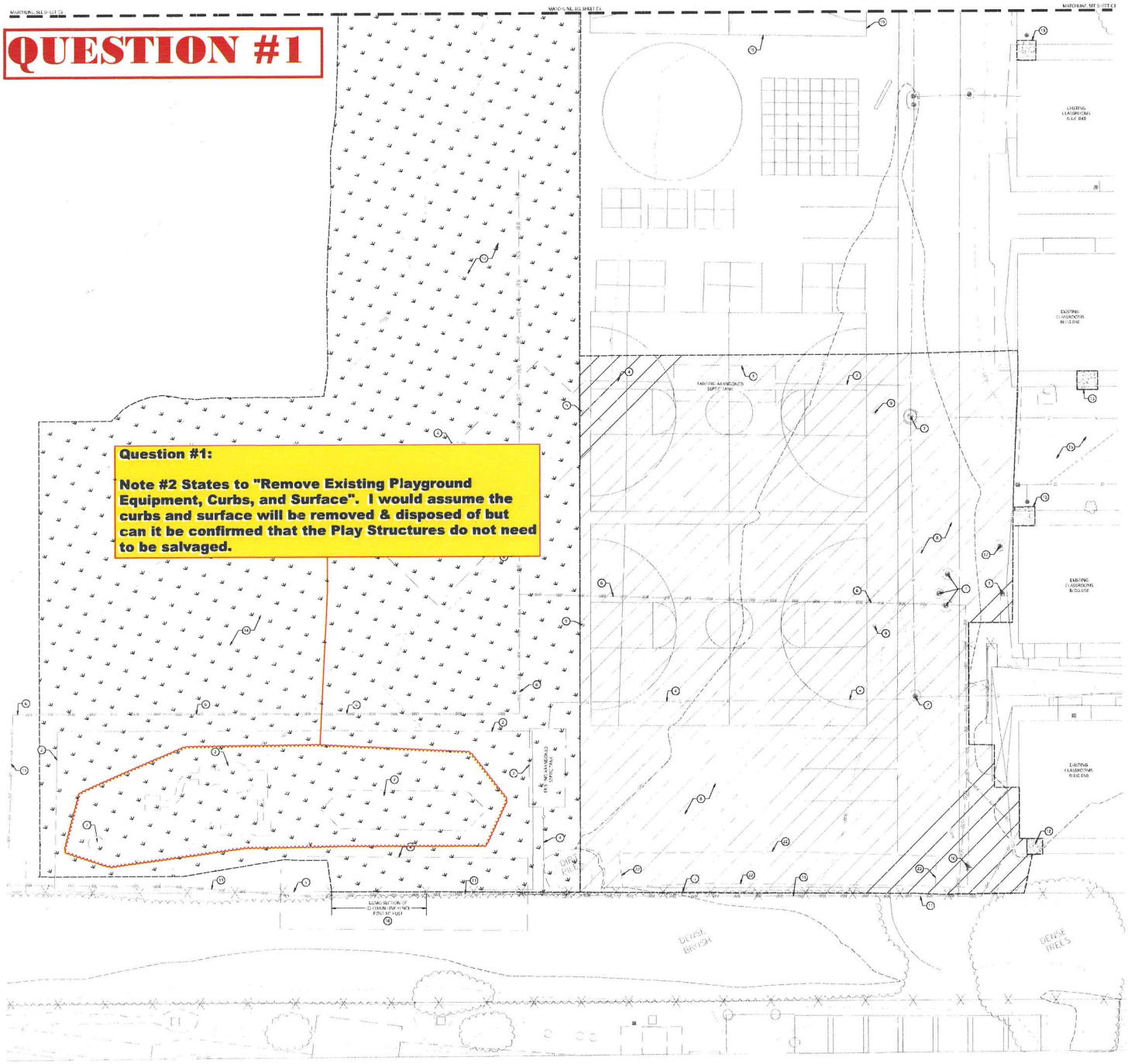

DEMOLITION NOTES

- (10) PROTECT IN PLACE IRRIGATION LINE
- (11) DEMOLISH CONCRETE LANDING
- (12) PROTECT IN PLACE EXISTING METE CLOSURE
- (13) CLEAR AND GRUB AND PREPARE FOR GRADING AND NEW IMPROVEMENTS
- (14) PROTECT IN PLACE EXISTING DECOMPOSED GRANITE
- (15) EXISTING UNDERGROUND SERVICE TANK TO REMAIN
- (16) PROTECT IN PLACE SEWER CLEANOUT
- (17) DEMOLISH LYNCH POST TO POST
- (18) PROTECT IN PLACE EXISTING STRIPING
- (19) PROTECT IN PLACE EXISTING BALL WALL
- (20) PROTECT IN PLACE EXISTING BASKETBALL POLE
- (21) GENERAL CONTRACTOR RELOCATE (3) SHIPPING CONTAINERS AND (2) TIFF SHEDS ON SITE PER DISTRICT DIRECTION SEE ALT FOR LOCATION
- (22) REMOVE CONCRETE CURB AND SIDEWALK

LEGEND

- REMOVE ASPHALT
- CLEAR AND GRUB, PREPARE FOR GRADING AND NEW IMPROVEMENTS
- REMOVE CONCRETE

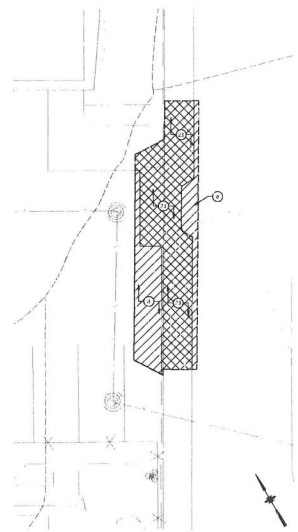

DRIVEWAY APPROACH REMOVAL
SCALE 1" = 10'

SCALE 1" = 10'

FINNEY ARCHITECTS
2155 SOUTH BASCOM AVE.
SUITE 240
CAMPBELL, CA 95008
PHONE: 408-398-1450

CLAD

DEMOLITION PLAN

NEW CLASSROOMS AT
DANA ELEMENTARY SCHOOL
920 W TEFFT STREET, NIPOMO, CALIFORNIA 93444

REVISIONS

NO.	TITLE	DATE
1	FINNEY ARCH COMMENTS	08/06/

DRAWN BY:
CHECKED BY: AG
PROJECT NO: DA
24075 DSA V1 SUBMITTAL 05/28/2

C2

COPYRIGHT © 2024

PRE-BID CLARIFICATION FORM (For Contractor's Use)

PROJECT NAME:	Dana Elementary 6 Classrooms		
PROJECT NUMBER:	0606		
		EMAIL:	prebidquestions@lmusd.org

DATE:	**7/22/2026**		
FROM:	**Butch Pope Engineering**	EMAIL:	**estimator@butchpopeconstruction.com**
DOCUMENT/DIVISION NUMBER:	**02-41-13**	DRAWING NUMBER:	**C-2**

REQUESTED CLARIFICATION:

General Note No. 16 states, "Underground Septic Tank to Remain." However, no reference to Note No. 16 could be located on the Civil Plans.

Both abandoned septic tanks identified on the plans (refer to the attached markup with green highlights) are labeled with Note No. 3, which directs the Contractor to remove the existing septic tanks. As currently shown, there does not appear to be any septic tank designated to remain in place.

Please confirm whether an existing underground septic tank is intended to remain. If so, please identify its location on the plans and provide any applicable requirements for protection or abandonment to ensure the Contractor's bid accurately reflects the intended scope of work.

RESPONSE TO CLARIFICATION:

See attached civil demolition plan sheet C2 where one tank (outside of the building footprint) has been changed to remain. Note 16 added back to plan. The other tank will still be removed as part of this project.

Attach additional numbered sheets as necessary; however, only one (1) request shall be contained on each submitted form.

QUESTION #2

Question #2

General Note No. 16 states, "Underground Septic Tank to Remain." However, no reference to Note No. 16 could be located on the Civil Plans.

Both abandoned septic tanks identified on the plans (refer to the attached markup with green highlights) are labeled with Note No. 3, which directs the Contractor to remove the existing septic tanks. As currently shown, there does not appear to be any septic tank designated to remain in place.

Please confirm whether an existing underground septic tank is intended to remain. If so, please identify its location on the plans and provide any applicable requirements for protection or abandonment to ensure the Contractor's bid accurately reflects the intended scope of work.

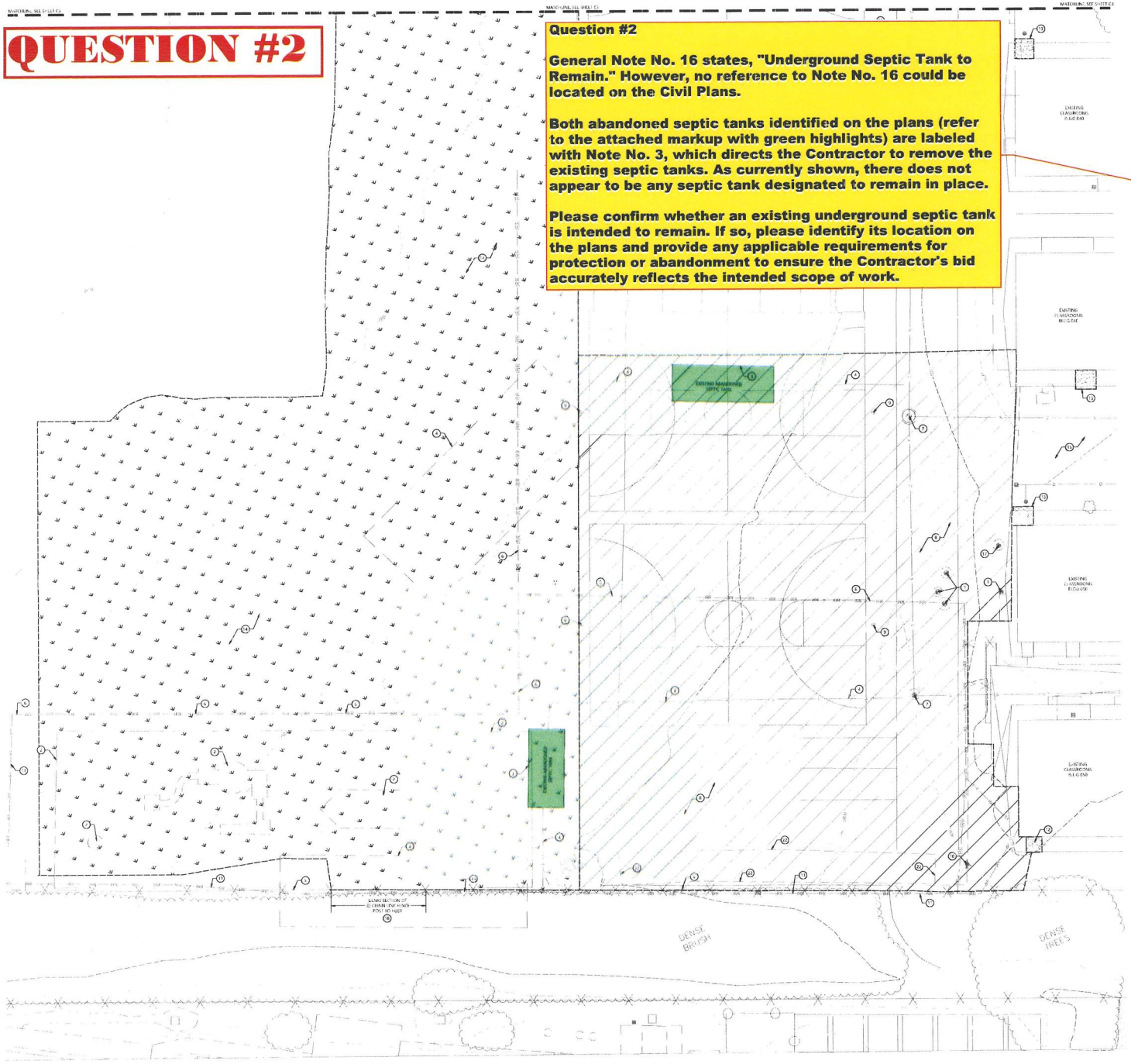

DEMOLITION NOTES

1. PROTECT IN PLACE EXISTING WATER VALVES
2. REMOVE FLUORESCENT LIGHTING, CURB AND SUBSTRATE
3. REMOVE ABANDONED CONCRETE FILLED UNDERGROUND SEPTIC TANK AND ALL ASSOCIATED PIPES
4. REMOVE ABANDONED SEPTIC LEACH LINES
5. PROTECT IN PLACE FENCE
6. REMOVE IRRIGATION PIPE
7. PROTECT IN PLACE EXISTING SHRUB MAINTENANCE
8. REMOVE ASPHALT
9. REMOVE AND SALVAGE IN GROUND BASKETBALL HOOP
10. PROTECT IN PLACE EXISTING FIRE HYDRANT
11. PROTECT IN PLACE IRRIGATION STUB
12. DEMOLISH CONCRETE LANDING
13. PROTECT IN PLACE EXISTING A/C ENCLOSURE
14. CLEAR AND GRUB AND PREPARE FOR GRADING AND NEW IMPROVEMENTS
15. EXISTING UNDERGROUND SEPTIC TANK TO REMAIN
16. [illegible]
17. UNBOLT FENCE POST TO REUSE
18. PROTECT IN PLACE EXISTING STRIPING
19. PROTECT IN PLACE EXISTING BALL WALL
20. PROTECT IN PLACE EXISTING BASKETBALL POLE
21. GENERAL CONTRACTOR RELOCATE (2) SHIPPING CONTAINERS AND (2) 8'x8' SHEDS ON SITE PER DISTRICT DIRECTION. SEE A0.2 FOR LOCATION
22. REMOVE CONCRETE CURB AND SIDEWALK

LEGEND

- REMOVE ASPHALT
- CLEAR AND GRUB, PREPARE FOR GRADING AND NEW IMPROVEMENTS
- REMOVE CONCRETE

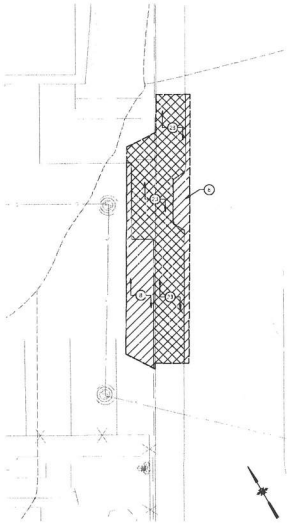

DRIVEWAY APPROACH REMOVAL

SCALE 1" = 10'

SCALE 1" = 10'

COPYRIGHT © 2024

FINNEY ARCHITECTS
2155 SOUTH BASCOM AVE.
SUITE 250
CAMPBELL, CA 95008
PHONE: 408-398-1450

CLAD

DEMOLITION PLAN

NEW CLASSROOMS AT
DANA ELEMENTARY SCHOOL
920 W TEFFT STREET, NIPOMO, CALIFORNIA 93444

REVISIONS

NO.	ITEM	DATE
1	FINNEY ARCH COMMENTS	08/04/2

DRAWN BY:
CHECKED BY: AG
PROJECT NO: GA
24075 DSA V3 SUBMITTAL 05-28-2

C2

PRE-BID CLARIFICATION FORM (For Contractor's Use)

PROJECT NAME:	Dana Elementary 6 Classrooms		
PROJECT NUMBER:	0606		
		EMAIL:	prebidquestions@lmusd.org

DATE:	**7/22/2026**		
FROM:	**Butch Pope Engineering**	EMAIL:	**estimator@butchpopeconstruction.com**
DOCUMENT/DIVISION NUMBER:	**Division 31**	DRAWING NUMBER:	**S-2.1**

REQUESTED CLARIFICATION:

The Contract Drawings contain several references to the Project Geotechnical (Soils) Report. However, the Geotechnical Report does not appear to be included within the Bid Documents made available for this project. Please provide the Project Geotechnical Report for bidder reference. If the report has already been included as part of the bid package, please identify its location within the Contract Documents or provide the appropriate file name so it can be readily located.

RESPONSE TO CLARIFICATION:

The Geotechnical report has been issued in Addendum #1.

J. Tischler
Finney Architects
8-11-26

Attach additional numbered sheets as necessary; however, only one (1) request shall be contained on each submitted form.

QUESTION #3

Question #3

The Contract Drawings contain several references to the Project Geotechnical (Soils) Report. However, the Geotechnical Report does not appear to be included within the Bid Documents made available for this project.

Please provide the Project Geotechnical Report for bidder reference. If the report has already been included as part of the bid package, please identify its location within the Contract Documents or provide the appropriate file name so it can be readily located.

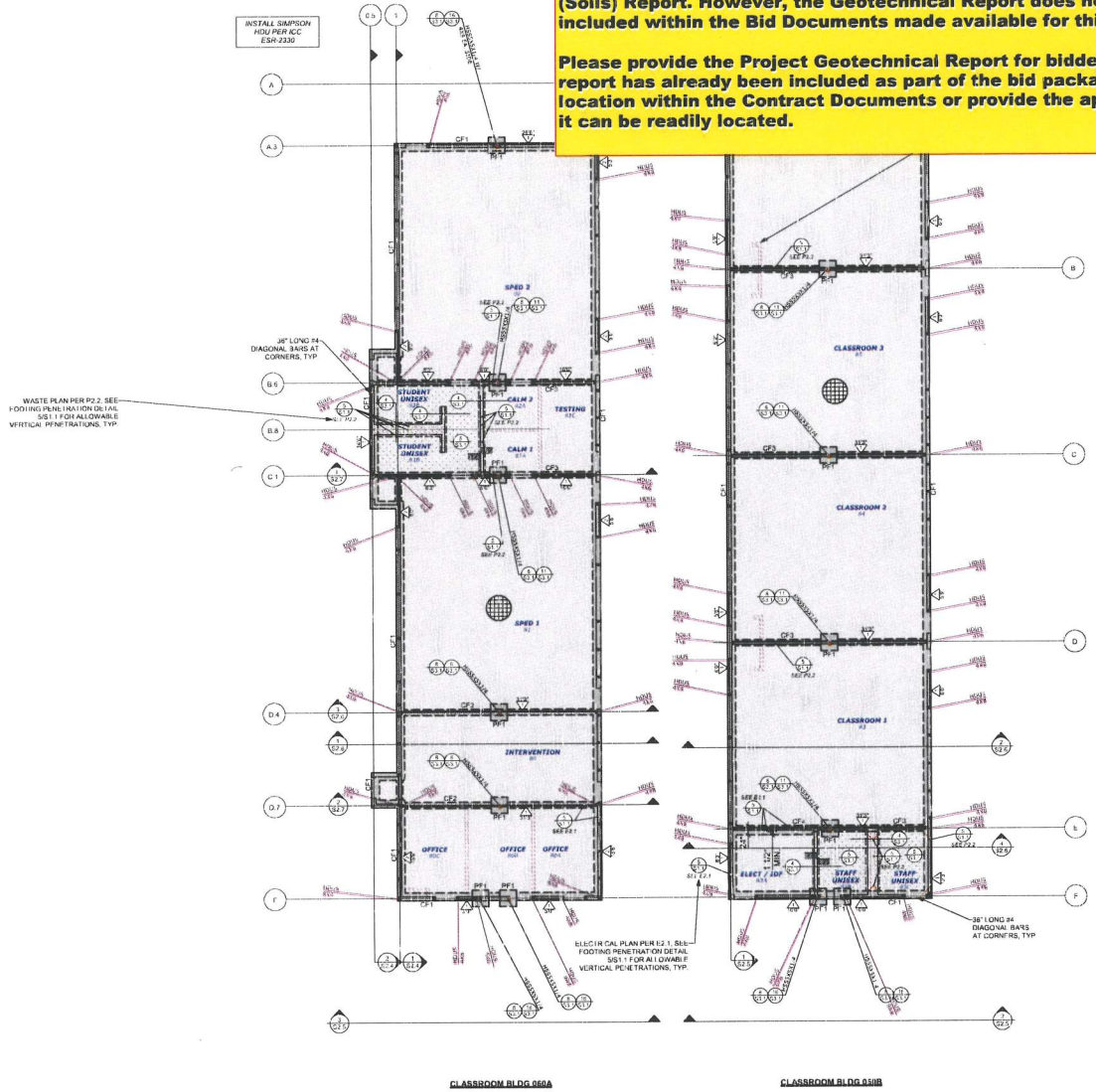

1 FOUNDATION PLAN

1/8" = 1'-0"

0 2' 5 10' 20 30

SHEATH ALL EXTERIOR NON-SWS AS DELTA 1, MIN., TYP. PER ARCH.

SHEARWALL SCHEDULE

NO.	SHEATHING MATERIAL	NO. OF SIDES	EDGE	NAILING[1] EDGE SPACING	NAILING[1] FIELD SPACING	TRANSFER A TEST[2]											
1	15/32" PLYWOOD/OSB	1	15d	6"	6"	46"	9"	12.5"	-	11"	11"	11"	-			2"	380
1	15/32" PLYWOOD/OSB	1	15d	4"	4"	35"	6"	8"	-	1"	1"	1"	-			2"	510
1	15/32" PLYWOOD/OSB	1	15d	3"	3"	27"	4"	6"	-	8"	5"	2"	-			1.5"	760
1	15/32" PLYWOOD/OSB	1	15d	2"	2"	20"	3.5"	4.5"	-	4.5"	4"	2"	-			1"	870
1	15/32" PLYWOOD/OSB	2	15d	4"	4"	17"	2"	8"	-	4"	2"	2"	-				1025
1	15/32" PLYWOOD/OSB	2	15d	3"	3"	12"	2"	2"	-	3"	2.5"	2"	-				1330
1	15/32" DOUG FIR/OSB	2	15d	2"	2"	10"	-	-	-	2"	2"	2"	-				1740

FOOTNOTES:
1. Use COMMON NAILS ONLY for all sheathing. Field nailing is 12" o.c. Provide 3x framing at all panel joints UNO.
2. Anchor bolts for shearwalls must have 3" x 3" x 0.229" plate washers min., install per 2021 AWC SDPWS 4.3.6.4.3.
3. Dowel 5/16 2" min. into framing below min. length is usually 6 1/2" in 2x sills & 8" in 3x sills, 1/2" J BOLT (BC ESR-2236)
4. Dowel 22/16 2" min. into framing below (min. length is usually 5" at 2x sills & 6" in 3x sills, 1/2" J BAPHO ER-192)
5. Dowel 3/8" bolt 3" min. into framing below per plan (usually 5" bolt at 2x sills & 7" bolt at 3x sills, 1/2" J.
6. Mechanical screw pattern required. Use 4 min. mechanically fastened sills required for 1" edge distance & 1 1/2" spacing between rows. Install mechanically to metal hold-down at top plates, see simpson clips on each side of wall.
7. Hold-downs are NOT allowed through 3x sills or sheathing, bolt or min 3.5", 1" min. penetration into 3x is required.
8. Value based on 3/16 AWG, NC & T data 120 for 6j84-6 rated construction.
9. At Delta 1 shearwalls, 2x framing members may be used at all panel joints UNO.
10. LTP4 installed over sheathing shall use 8d common nails (0.131" x 2-1/2") UNO per plan.

SEE SPECS, SCHEDULE, NOTES, AND TYPICAL DETAILS FOR ADD'L REQUIREMENTS

TYPICAL SHEARWALL CALLOUT

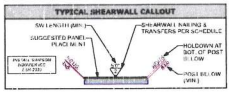

TYPICAL SHEARWALL W/ OPENING CALLOUT

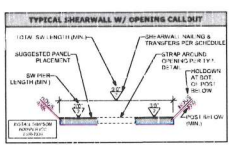

FOUNDATION NOTES

SYMBOL KEY:

- CF# = CONTINUOUS FOOTING OR GRADE BEAM PER SCHED. (BOLD LINE INDICATES CURB)
- = CONTINUOUS THICKENED SLAB PER PLAN (BOLD LINE INDICATES CURB)
- PF# = PAD FOOTING PER SCHED
- = 4" SLAB ON GRADE W/ #3 @ 18" O.C. EACH WAY PER TYP. DETAIL
- = SLAB ON GRADE PER PLAN W/ 1.5" DEPRESSION PER PLAN
- = WALL STUDS ABOVE PER SCHEDULE
- = SHEAR WALL ABOVE PER SCHEDULE
- = POST ABOVE PER PLAN
- HDU# = HOLDOWN AT BOT. OF POST PER PLAN = SEE TYP. DETAIL 20/S1.1 FOR FOUNDATION ANCHORAGE, TYP. UNO
- = STEP PER ARCH IN FRAMING OR SLAB

NOTES:

SEE GENERAL NOTES & SPECIFICATIONS FOR ADDITIONAL REQUIREMENTS AND MATERIAL SPECIFICATIONS.

SEE S1 SERIES SHEETS FOR TYPICAL DETAILS. TYPICAL DETAILS APPLY THROUGHOUT THIS PLAN UNO.

ALL DIMENSIONS PER ARCHITECTURAL PLANS. CONTRACTOR TO VERIFY DIMENSIONS PRIOR TO COMMENCEMENT OF CONSTRUCTION.

SEE SOILS REPORT, GENERAL NOTES & SPECS FOR ADDITIONAL REQUIREMENTS AND MATERIAL SPECS

PRIOR TO THE CONTRACTOR REQUESTING A BUILDING DEPARTMENT FOUNDATION INSPECTION, THE SOILS ENGINEER SHALL ADVISE THE BUILDING INSPECTOR IN WRITING THAT:

a) THE BUILDING PAD WAS PREPARED IN ACCORDANCE WITH THE SOILS REPORT
b) THE UTILITY TRENCHES HAVE BEEN PROPERLY BACKFILLED AND COMPACTED
c) THE FOUNDATION EXCAVATIONS, THE SOIL'S EXPANSIVE CHARACTERISTICS AND BEARING CAPACITY CONFORM TO THE SOILS REPORT

PROVIDE WALL LENGTH, CONTINUOUS, FULL-DEPTH, SOLID BLOCKING (WHERE FLOOR JOISTS ARE PERPENDICULAR) OR DOUBLE FLOOR JOIST (WHERE FLOOR JOISTS ARE PARALLEL) FOR ALL WALLS AT LEVEL ABOVE

CONTINUOUS FOOTING SCHEDULE

MARK	WIDTH (W)	DEPTH (D)	LONGITUDINAL REINF.	TRANSVERSE REINF.	NOTES
CF1	15"	18"	(2) #5 TOP & BOT.	#3 @ 6" OC	SEE DET 1.S3.1
CF2	15"	18"	(3) #5 TOP & BOT.	#3 @ 6" OC	SLL DET 2.S3.1
CF3	15"	18"	(3) #5 TOP & BOT.	#3 @ 6" OC	SEE DET 3.S3.1
CF4	15"	18"	(3) #5 TOP & BOT.	#3 @ 6" OC	SEE DET 3.S3.1

1. FOUNDATIONS SHALL SATISFY THE MINIMUM REQUIRED EMBEDMENT INTO SUITABLE BEARING SOIL PER SOILS REPORT.

PAD FOOTING SCHEDULE

MARK	SIZE (W x B)	EMBED.	REINF	NOTES
PF1	18" x 18"	18"	#4 @ 6" OC BOTTOM	SEE DET PLR PLAN

1. FOUNDATIONS SHALL SATISFY THE MINIMUM REQUIRED EMBEDMENT INTO SUITABLE BEARING SOIL PER SOILS REPORT.

SOILS VERIFICATION STAMP
DSA OF THE STATE ARCHITECT
APP: 03-125885 INC
REVIEWED FOR:
SS ☑ FLS ☑ ACS ☑
DATE: 06-05-2024
DSA STAMP AREA

FINNEY ARCHITECTS
2155 SOUTH BASCOM AVE.
SUITE 250
CAMPBELL, CA 95008
PHONE: 408-398-1450

I&S STRUCTURAL
SAN LUIS OBISPO
PASADENA
SANTA BARBARA
NORTHERN CALIFORNIA
HEADQUARTERS
684 Clarion Court
San Luis Obispo, CA 93401

FOUNDATION PLAN

NEW CLASSROOMS AT
DANA ELEMENTARY SCHOOL
920 W TEFFT STREET, NIPOMO, CALIFORNIA 93444
LUCIA MAR UNIFIED SCHOOL DISTRICT

REVISIONS
NO. ITEM DATE

DRAWN BY: I&S NO: AMI
CHECKED BY: 240520 INI
PROJECT NO DATE
24149 DSA V3 SUBMITTAL: 06-15-2

S2.1

COPYRIGHT ©2024

PRE-BID CLARIFICATION FORM (For Contractor's Use)

PROJECT NAME:	Dana Elementary 6 Classrooms		
PROJECT NUMBER:	0606		
		EMAIL:	prebidquestions@lmusd.org

DATE:	**7/22/2026**		
FROM:	**Butch Pope Engineering**	EMAIL:	**estimator@butchpopeconstruction.com**
DOCUMENT/DIVISION NUMBER:	**Division 33**	DRAWING NUMBER:	**C-8**

REQUESTED CLARIFICATION:

Plan Sheet C-8, Note No. 22, references a proposed water tie-in to be constructed in accordance with NCSD Detail W-9. Detail W-9 depicts a typical water service installation, including the installation of a new water service and meter downstream of the tie-in.

Based on the Contract Drawings, it appears the proposed connection is to an existing 4-inch water line that is already in service and metered. Please confirm that NCSD Detail W-9 is being referenced solely to illustrate the required tie-in methodology, and that the installation of a new water service, meter, and associated appurtenances is not required as part of this Contract.

If additional work beyond the tie-in is intended, please provide clarification and revised details identifying the required scope.

RESPONSE TO CLARIFICATION:

NCSD Detail W-9 is referenced only to illustrate the required tie-in methodology. Installation of a new water service, meter, meter box, or associated appurtenances is not required as part of this project. The proposed work is limited to the connection to the existing water system.

Attach additional numbered sheets as necessary; however, only one (1) request shall be contained on each submitted form.

QUESTION #4

Question #4

Plan Sheet C-8, Note No. 22, references a proposed water tie-in to be constructed in accordance with NCSD Detail W-9. Detail W-9 depicts a typical water service installation, including the installation of a new water service and meter downstream of the tie-in.

Based on the Contract Drawings, it appears the proposed connection is to an existing 4-inch water line that is already in service and metered. Please confirm that NCSD Detail W-9 is being referenced solely to illustrate the required tie-in methodology, and that the installation of a new water service, meter, and associated appurtenances is not required as part of this Contract.

If additional work beyond the tie-in is intended, please provide clarification and revised details identifying the required scope.

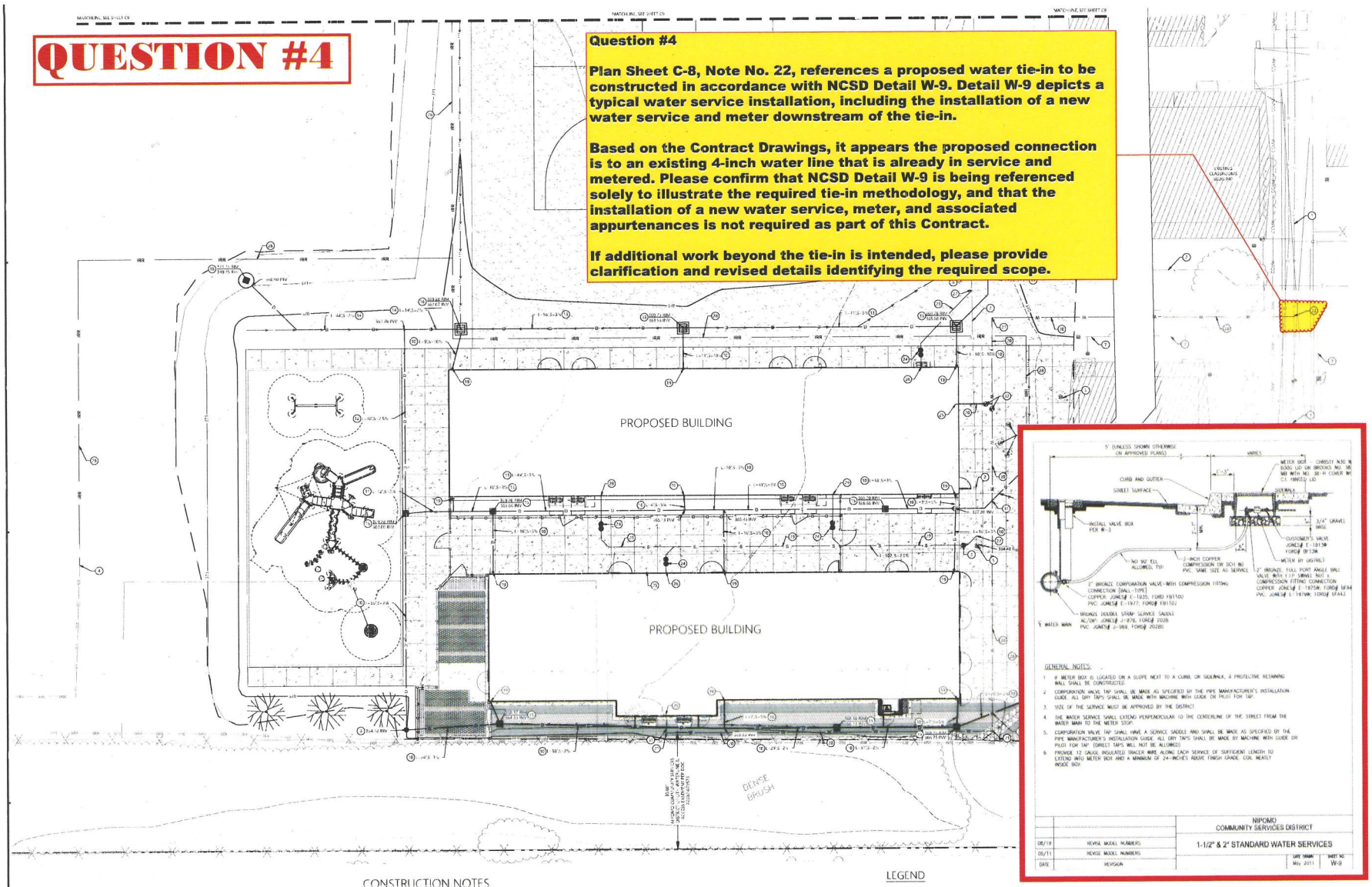

CONSTRUCTION NOTES

1. EXISTING 4" C900 PVC WATERLINE TO REMAIN.
2. EXISTING 6" PVC SS TO REMAIN.
3. INSTALL ORI-WAY SEWER CLEANOUT. INSTALLATION OF CLEANOUT TO BE PER NIPOMO COMMUNITY SERVICE DISTRICT DETAIL S-4 ON SHEET C11. INSTALL CONCRETE COLLARS ON ALL CLEANOUTS.
4. CONTRACTOR TO VERIFY LOCATION OF EXISTING IRRIGATION LINE FOR NEW IR-PIPE.
5. EXISTING SEWER CLEANOUT TO REMAIN, LID TO BE ADJUSTED TO PROPOSED GRADE.
6. EXISTING SEWER MANHOLE TO REMAIN. RIM ELEVATION TO BE ADJUSTED TO PROPOSED GRADE.
7. EXISTING STORM DRAIN TO REMAIN.
8. EXISTING FIRE HYDRANT TO REMAIN.
9. EXISTING WATER VALVE TO REMAIN. LID TO BE ADJUSTED TO PROPOSED GRADE.
10. PROPOSED 4" PVC STORM DRAIN PIPE, LENGTH AND SLOPE PER PLAN.
11. PROPOSED 6" PVC STORM DRAIN PIPE, LENGTH AND SLOPE PER PLAN.
12. PROPOSED 8" PVC STORM DRAIN PIPE, LENGTH AND SLOPE PER PLAN.
13. PROPOSED 12" HDPE STORM DRAIN PIPE, LENGTH AND SLOPE PER PLAN.
14. PROPOSED 18" HDPE STORM DRAIN PIPE, LENGTH AND SLOPE PER PLAN.
15. PROPOSED 12"x12" MODIFIED CONCRETE CATCH BASIN OR APPROVED EQUAL ON SHEET C11. USE GRATE DESIGNED TO RESIST ENTRY OF HIGH-HEEL SHOES.
16. PROPOSED 24"x24" MODIFIED CONCRETE CATCH BASIN OR APPROVED EQUAL ON SHEET C11. USE GRATE DESIGNED TO RESIST ENTRY OF HIGH-HEELED SHOES.
17. PROPOSED 24" CONCRETE STORM WATER MANHOLE OR APPROVED EQUAL ON SHEET C11.
18. PROPOSED 4" CONCRETE DRIVEWELL. INSTALL DRIVEWELL BASE, LIFT, AND TWO DRIVEWELL RISERS, ENTIRE ASSEMBLY WITH CONCRETE CORE LIFTS WITH RISERS AND FRAME AND COVER TO MEET GRADE. RIM AND INVERT PER PLAN. SEE DRIVEWELL DETAILS ON SHEET C5.
19. INSTALL DOWNSPOUT CONNECTION TO STORM DRAIN PER DETAIL 1 ON SHEET C11.
20. INSTALL 2" SCHEDULE 40 DOMESTIC WATERLINE. SEE NIPOMO COMMUNITY SERVICE DISTRICT DETAIL W-2 FOR WATER PIPE BEDDING AND TRENCH BACKFILL DETAIL ON SHEET C11.
21. PROPOSED THRUST BLOCK FOR WATERLINE INSTALLATION PER NIPOMO COMMUNITY SERVICE DISTRICT DETAIL W-4 FOR TYPICAL THRUST BLOCK DETAILS ON SHEET C11.
22. PROPOSED WATERLINE TIE-IN TO EXISTING 4" C900 PVC WATERLINE MAIN PER NIPOMO COMMUNITY SERVICE DISTRICT DETAIL W-9 ON SHEET C11.
23. INSTALL 4" SDR 35 SANITARY SEWER. SEE NIPOMO COMMUNITY SERVICE DISTRICT DETAIL S-1 FOR SEWER PIPE BEDDING AND TRENCH BACKFILL DETAIL ON SHEET C11.
24. INSTALL TWO-WAY SEWER CLEAN OUT. INSTALLATION OF CLEANOUT TO BE PER NIPOMO COMMUNITY SERVICE DISTRICT DETAIL S-4 AND W-4 ON SHEET C11. INSTALL CONCRETE COLLARS ON ALL CLEANOUTS.
25. PROPOSED WATERLINE POINT OF CONNECTION AT PROPOSED BUILDING. SEE PLUMBING PLAN FOR ADDITIONAL INFORMATION.
26. PROPOSED SANITARY SEWER POINT OF CONNECTION AT PROPOSED BUILDING. SEE PLUMBING PLAN FOR ADDITIONAL INFORMATION.
27. SANITARY SEWER TO TIE INTO EXISTING SEWER MAIN PER NIPOMO COMMUNITY SERVICE DISTRICT DETAIL S-6 FOR TYPICAL SEWER LATERAL ON SHEET C11.
28. NEW IRRIGATION MAINLINE BY OWNER CONTRACTOR SHALL TRENCH AND BACKFILL ONLY PER DETAIL W-2, SHEET C11.
29. INSTALL 4" SDR 35 SANITARY SEWER. SEE NIPOMO COMMUNITY SERVICE DISTRICT DETAIL S-2 FOR SEWER PIPE BEDDING AND TRENCH BACKFILL DETAIL ON SHEET C11.
30. NEW IRRIGATION MAINLINE TO TIE INTO EXISTING BY OWNER CONTRACTOR. SHALL TRENCH AND BACKFILL ONLY PER DETAIL W-2, SHEET C11.
31. WATERLINE CROSSING UNDER HORIZONTAL STORM DRAIN WITH 18" MIN. SEPARATION.
32. INSTALL WATERING VALVE WITH VALVE ASSEMBLY PER NIPOMO COMMUNITY SERVICE DISTRICT DETAIL W-3, SHEET C11.
33. PROPOSED 12"x12" MODIFIED CONCRETE CATCH BASIN OR APPROVED EQUAL ON SHEET C11. USE GRATE DESIGNED TO RESIST ENTRY OF HIGH-HEELED SHOES.

NOTE: EXISTING UTILITIES HAVE BEEN PLOTTED FROM DRAWING SURVEY AND AS-BUILT INFORMATION. CONTRACTOR TO VERIFY SIZE AND LOCATION OF ALL EXISTING UTILITIES BEFORE INSTALLATION OF PROPOSED UTILITIES.

NOTE: ALL EXISTING UTILITY BOXES, LIDS, OR GRATES WITHIN THE AREA OF NEW IMPROVEMENTS SHALL BE ADJUSTED TO NEW GRADES REGARDLESS IF SHOWN GRAPHICALLY OR NOT.

LEGEND

- EXISTING SEWER MANHOLE
- FIRE HYDRANT
- EXISTING SEWER CLEANOUT
- ONE-WAY SEWER CLEANOUT
- TWO-WAY SEWER CLEANOUT
- EXISTING WATER VALVE
- PROPOSED WATER VALVE
- PROPOSED STORM DRAIN CATCH BASIN
- D — STORM DRAIN (SIZE PER PLAN)
- SS — SANITARY SEWER (SIZE PER PLAN)
- W — WATER LINE (SIZE PER PLAN)
- G — GAS LINE
- E — ELECTRICAL
- IRR — IRRIGATION LINE
- PROPOSED ASPHALT CONCRETE
- PROPOSED CONCRETE
- PROPOSED SYNTHETIC TURF
- EXISTING BUILDINGS

SCALE: 1" = 10'

COPYRIGHT © 2024

IDENTIFICATION STAMP
DIV OF THE STATE ARCHITECT
APP: 03-125685 INC
REVIEWED FOR
SS ☑ FLS ☑ ACS ☑
DATE 06/23/2026
DSA STAMP AREA

FINNEY ARCHITECTS
2155 SOUTH BASCOM AVE.
SUITE 250
CAMPBELL, CA 95008
PHONE: 408-398-1450

REGISTERED PROFESSIONAL ENGINEER
DAVID W. CRANDALL
NO. 70844
CIVIL
STATE OF CALIFORNIA

CLAD

UTILITY PLAN

NEW CLASSROOMS AT
DANA ELEMENTARY SCHOOL
920 W TEFFT STREET, NIPOMO, CALIFORNIA 93444

REVISIONS

NO.	ITEM	DATE
1	FINNEY ARCH COMMENTS	08/04/

DRAWN BY
CHECKED BY AG.
PROJECT NO. DA
240/s DSA V3 SUBMITTAL 05/23/2

C8

PRE-BID CLARIFICATION FORM (For Contractor's Use)

PROJECT NAME:	Dana Elementary 6 Classrooms		
PROJECT NUMBER:	0606		
		EMAIL:	prebidquestions@lmusd.org

DATE:	**7/22/2026**		
FROM:	**Butch Pope Engineering**	EMAIL:	**estimator@butchpopeconstruction.com**
DOCUMENT/DIVISION NUMBER:	**Division 33**	DRAWING NUMBER:	**C-8**

REQUESTED CLARIFICATION:

Plan Sheet C-8, Note No. 17, references a proposed 48-inch Mid-State Storm Drain Manhole. However, the undersigned was unable to locate either the referenced manhole or Note No. 17 clearly identified on the Civil Drawings. The only manhole clearly depicted on the plans appears to be Note No. 18, which references the proposed Oldcastle Dry Well Manhole.

Please clarify the intended location of the proposed 48-inch Mid-State Storm Drain Manhole associated with Note No. 17 and provide revised plan references or details, if applicable. Alternatively, if Note No. 17 was included in error, please confirm that the reference is a typographical error and advise accordingly.

RESPONSE TO CLARIFICATION:

Construction Note 17 on Plan Sheet C-8 was included in error. The referenced 48-inch Mid-State Storm Drain Manhole is not part of the project and no longer applies to the plans. Construction Note 17 has been revised to state "NOT USED." No proposed 48-inch Mid-State Storm Drain Manhole is associated with this note, and no additional location, detail, or reference is applicable.

Attach additional numbered sheets as necessary; however, only one (1) request shall be contained on each submitted form.

QUESTION #5

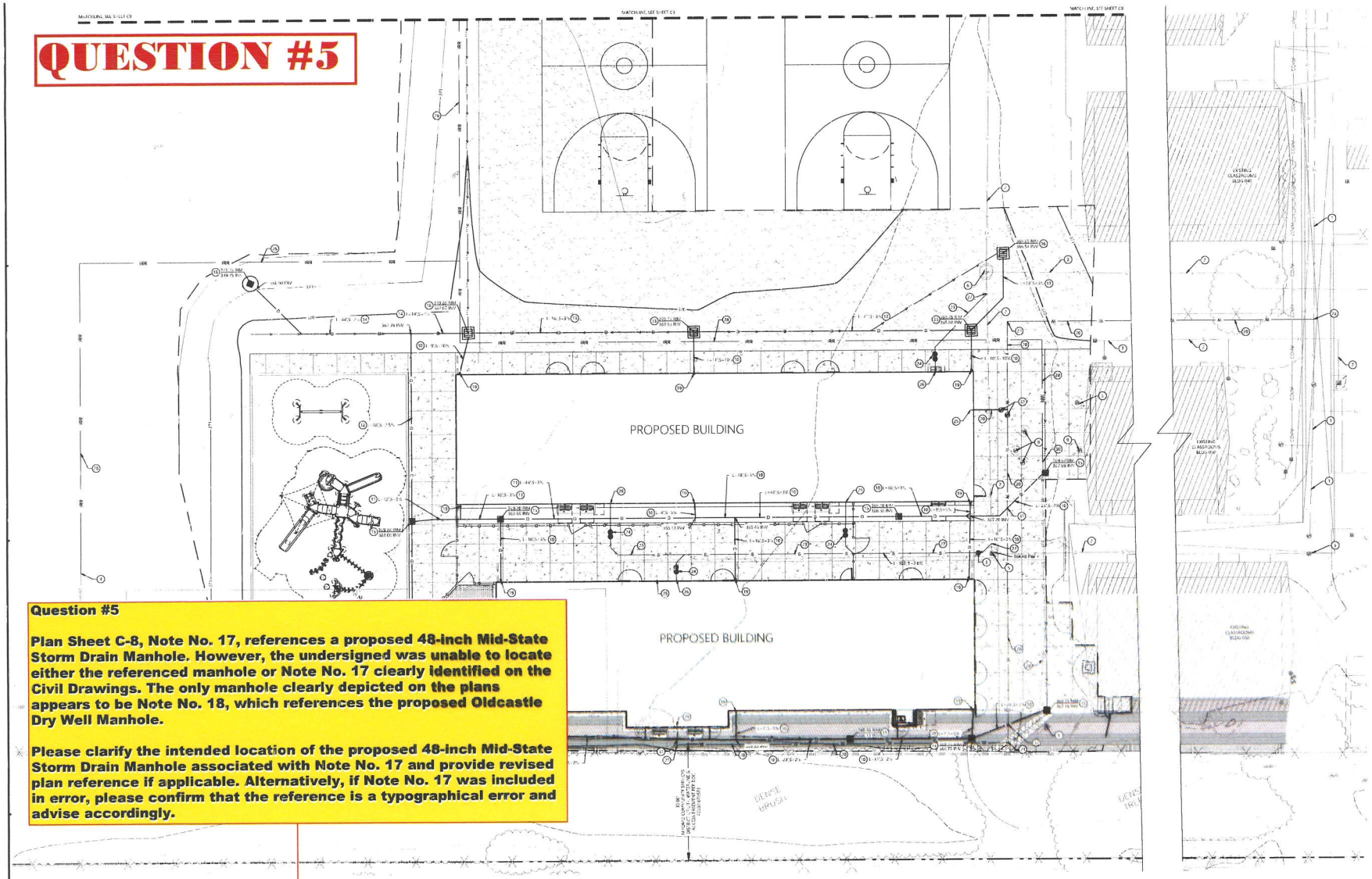

Question #5

Plan Sheet C-8, Note No. 17, references a proposed 48-inch Mid-State Storm Drain Manhole. However, the undersigned was unable to locate either the referenced manhole or Note No. 17 clearly identified on the Civil Drawings. The only manhole clearly depicted on the plans appears to be Note No. 18, which references the proposed Oldcastle Dry Well Manhole.

Please clarify the intended location of the proposed 48-inch Mid-State Storm Drain Manhole associated with Note No. 17 and provide revised plan reference if applicable. Alternatively, if Note No. 17 was included in error, please confirm that the reference is a typographical error and advise accordingly.

CONSTRUCTION NOTES

1. EXISTING 4" C900 PVC WATERLINE TO REMAIN.
2. EXISTING 6" PVC SEWER TO REMAIN.
3. INSTALL ONE-WAY SEWER CLEANOUT. INSTALLATION OF CLEANOUT TO BE PER NIPOMO COMMUNITY SERVICE DISTRICT DETAIL S-8 ON SHEET C11. INSTALL CONCRETE COLLARS ON ALL CLEANOUTS.
4. CONTRACTOR TO VERIFY LOCATION OF EXISTING IRRIGATION LINE FOR NEW TREES.
5. EXISTING SEWER CLEANOUT TO REMAIN. RIM ELEVATION TO BE ADJUSTED TO PROPOSED GRADE.
6. EXISTING SEWER MANHOLE TO REMAIN. RIM ELEVATION TO BE ADJUSTED TO PROPOSED GRADE.
7. EXISTING STORM DRAIN TO REMAIN.
8. EXISTING FIRE HYDRANT TO REMAIN.
9. EXISTING WATER VALVE TO REMAIN. LID TO BE ADJUSTED TO PROPOSED GRADE.
10. PROPOSED 4" PVC STORM DRAIN PIPE, LENGTH AND SLOPE PER PLAN.
11. PROPOSED 6" PVC STORM DRAIN PIPE, LENGTH AND SLOPE PER PLAN.
12. PROPOSED 8" HDPE STORM DRAIN PIPE, LENGTH AND SLOPE PER PLAN.
13. PROPOSED 12" HDPE STORM DRAIN PIPE, LENGTH AND SLOPE PER PLAN.
14. PROPOSED 18" HDPE STORM DRAIN PIPE, LENGTH AND SLOPE PER PLAN.
15. PROPOSED 12 x 12" MODIFIED CONCRETE CATCH BASIN OR APPROVED EQUAL ON SHEET C11. USE GRATE DESIGNED TO RESIST ENTRY OF HIGH HEELED SHOES.
16. PROPOSED 24" x 24" MODIFIED CONCRETE CATCH BASIN OR APPROVED EQUAL ON SHEET C11. USE GRATE DESIGNED TO RESIST ENTRY OF HIGH HEELED SHOES.
17. PROPOSED 48" MIDSTATE CONCRETE STORM WATER MANHOLE OR APPROVED EQUAL ON SHEET C11.
18. PROPOSED CONCRETE DRY WELL AND GRAVEL BASIN AND FAN ARRAY. REFER TO DETAIL ON SHEET C11 FOR DETAILS.
19. PROPOSED INSTALL WITH CONCRETE COVER LIDS WITH HOOKS AND FRAME AND COVER TO MEET GRADE. RIM AND INVERT PER PLAN. SEE DRAINAGE DETAILS ON SHEET C11.
20. INSTALL DOWNSPOUT CONNECTION TO STORM DRAIN PER DETAIL 1 ON SHEET C11.
21. INSTALL 2" SCH 80 PVC DOMESTIC WATERLINE. SEE NIPOMO COMMUNITY SERVICE DISTRICT DETAIL W-1 FOR WATER PIPE BEDDING AND TRENCH BACKFILL DETAIL ON SHEET C11.
22. PROPOSED NEW BUDDY FOR BUILDING. INSTALLATION PER NIPOMO COMMUNITY SERVICE DISTRICT DETAIL W-4 FOR TYPICAL THRUST BLOCK DETAILS ON SHEET C11.
23. PROPOSED WATERLINE TIE IN TO EXISTING 4" C900 PVC WATERLINE MAIN PER NIPOMO COMMUNITY SERVICE DISTRICT DETAIL W-8 ON SHEET C11.
24. INSTALL 4" SDR 35 SANITARY SEWER. SEE NIPOMO COMMUNITY SERVICE DISTRICT DETAIL S-1 FOR SEWER PIPE BEDDING AND TRENCH BACKFILL DETAIL ON SHEET C11.
25. INSTALL TWO-WAY SEWER CLEAN OUT. INSTALLATION OF CLEANOUT TO BE PER NIPOMO COMMUNITY SERVICE DISTRICT DETAIL S-8 ON SHEET C11. INSTALL CONCRETE COLLARS ON ALL CLEANOUTS.
26. PROPOSED WATERLINE POINT OF CONNECTION AT PROPOSED BUILDING. SEE PLUMBING PLAN FOR ADDITIONAL INFORMATION.
27. PROPOSED SANITARY SEWER POINT OF CONNECTION AT PROPOSED BUILDING. SEE PLUMBING PLAN FOR ADDITIONAL INFORMATION.
28. SANITARY SEWER TO TIE INTO EXISTING SEWER MAIN PER NIPOMO COMMUNITY SERVICE DISTRICT DETAIL S-6 FOR TYPICAL SEWER LATERAL ON SHEET C11.
29. NEW IRRIGATION MAINLINE BY OWNER. CONTRACTOR SHALL TRENCH AND BACKFILL ONLY PER DETAIL W-2, SH. SHEET C11.
30. INSTALL 2" SCH 80 SANITARY SEWER SERVICE. NIPOMO COMMUNITY SERVICE DISTRICT DETAIL S-2 FOR SEWER PIPE BEDDING AND TRENCH BACKFILL DETAIL ON SHEET C11.
31. NEW IRRIGATION MAINLINE TO TIE INTO EXISTING BY OWNER. CONTRACTOR SHALL TRENCH AND BACKFILL ONLY PER DETAIL W-2, SH. SHEET C11.
32. WATERLINE CROSSING UNDER PROPOSED STORM DRAIN WITH 18" MIN. SEPARATION.
33. INSTALL WATERLINE VALVE WITH VALVE ASSEMBLY PER NIPOMO COMMUNITY SERVICE DISTRICT DETAIL W-3, SH. SHEET C11.
34. PROPOSED 36 X 36" MIDSTATE CONCRETE CATCH BASIN OR APPROVED EQUAL ON SHEET C11. USE GRATE DESIGNED TO RESIST ENTRY OF HIGH HEELED SHOES.

NOTE: EXISTING UTILITIES HAVE BEEN SHOWN PER TOPOGRAPHIC SURVEY AND AS-BUILT INFORMATION. CONTRACTOR TO VERIFY SIZE AND LOCATION OF ALL EXISTING UTILITIES BEFORE INSTALLATION OF PROPOSED FUTURES.

NOTE: ALL EXISTING UTILITY BOXES, LIDS, OR GRATES WITHIN THE AREA OF NEW IMPROVEMENTS SHALL BE ADJUSTED TO NEW GRADES, REGARDLESS IF SHOWN GRAPHICALLY OR NOT.

LEGEND

- EXISTING SEWER MANHOLE
- FIRE HYDRANT
- EXISTING SEWER CLEANOUT
- ONE-WAY SEWER CLEANOUT
- TWO-WAY SEWER CLEANOUT
- EXISTING WATER VALVE
- PROPOSED WATER VALVE
- PROPOSED STORM DRAIN CATCH BASIN
- D — STORM DRAIN (SIZE PER PLAN)
- SS — SANITARY SEWER (SIZE PER PLAN)
- W — WATER LINE (SIZE PER PLAN)
- G — GAS LINE
- E — ELECTRICAL
- IRR — IRRIGATION LINE
- PROPOSED ASPHALT CONCRETE
- PROPOSED CONCRETE
- PROPOSED SYNTHETIC TURF
- EXISTING BUILDINGS

SCALE: 1" = 10'

COPYRIGHT © 2024

IDENTIFICATION STAMP DIV. OF THE STATE ARCHITECT
APP: 03-125585 INC.
REVIEW TYPE: SS ☑ FLS ☑ ACS ☑
DATE: 06/26/2024
DSA STAMP AREA

FINNEY ARCHITECTS
2155 SOUTH BASCOM AVE.
SUITE 250
CAMPBELL, CA 95008
PHONE: 408 398-1400

CLAD

UTILITY PLAN

NEW CLASSROOMS AT
DANA ELEMENTARY SCHOOL
920 W TEFFT STREET, NIPOMO, CALIFORNIA 93444
LUCIA MAR UNIFIED SCHOOL DISTRICT

REVISIONS			
NO	ITEM		DATE
1	FINNEY ARCH COMMENTS		08/04/

DRAWN BY:
CHECKED BY: AG.
PROJECT NO: DA
240/0 DSA V3 SUBMITTAL 05/28/2

C8

PRE-BID CLARIFICATION FORM (For Contractor's Use)

PROJECT NAME:	Dana Elementary 6 Classrooms		
PROJECT NUMBER:	0606		
		EMAIL:	prebidquestions@lmusd.org

DATE:	**7/22/2026**		
FROM:	**Butch Pope Engineering**	EMAIL:	**estimator@butchpopeconstruction.com**
DOCUMENT/DIVISION NUMBER:	**Division 33**	DRAWING NUMBER:	**C-11**

REQUESTED CLARIFICATION:

The Downspout Connection Detail depicts a single threaded cleanout with valve box cover. However, the accompanying note specifies that a two-way cleanout is required. The referenced two-way cleanout detail (Detail No. 2) illustrates an assembly consisting of two threaded cleanouts, each with a valve box cover, which differs from the downspout connection detail shown.

Please clarify the intended configuration for the downspout connections. Specifically, confirm whether the installation shall consist of the single threaded cleanout as depicted in the Downspout Connection Detail, or whether the connection is required to be constructed in accordance with Detail No. 2, utilizing a two-way cleanout assembly with two threaded cleanouts and two valve box covers.

RESPONSE TO CLARIFICATION:

The note referencing a two-way cleanout in the Downspout Connection Detail was included in error and has been removed.

The Downspout Connection Detail is correct as shown and is intended to depict a single threaded cleanout tee with a valve box cover. This detail applies to the storm drain system only.

Please note that two-way cleanouts are required for sanitary sewer applications only and are not intended for use with the storm drain downspout connections shown in this detail.

Attach additional numbered sheets as necessary; however, only one (1) request shall be contained on each submitted form.

QUESTION #6

Question:

The Downspout Connection Detail depicts a single threaded cleanout with valve box cover. However, the accompanying note specifies that a two-way cleanout is required. The referenced two-way cleanout detail (Detail No. 2) illustrates an assembly consisting of two threaded cleanouts, each with a valve box cover, which differs from the downspout connection detail shown.

Please clarify the intended configuration for the downspout connections. Specifically, confirm whether the installation shall consist of the single threaded cleanout as depicted in the Downspout Connection Detail, or whether the connection is required to be constructed in accordance with Detail No. 2, utilizing a two-way cleanout assembly with two threaded cleanouts and two valve box covers.

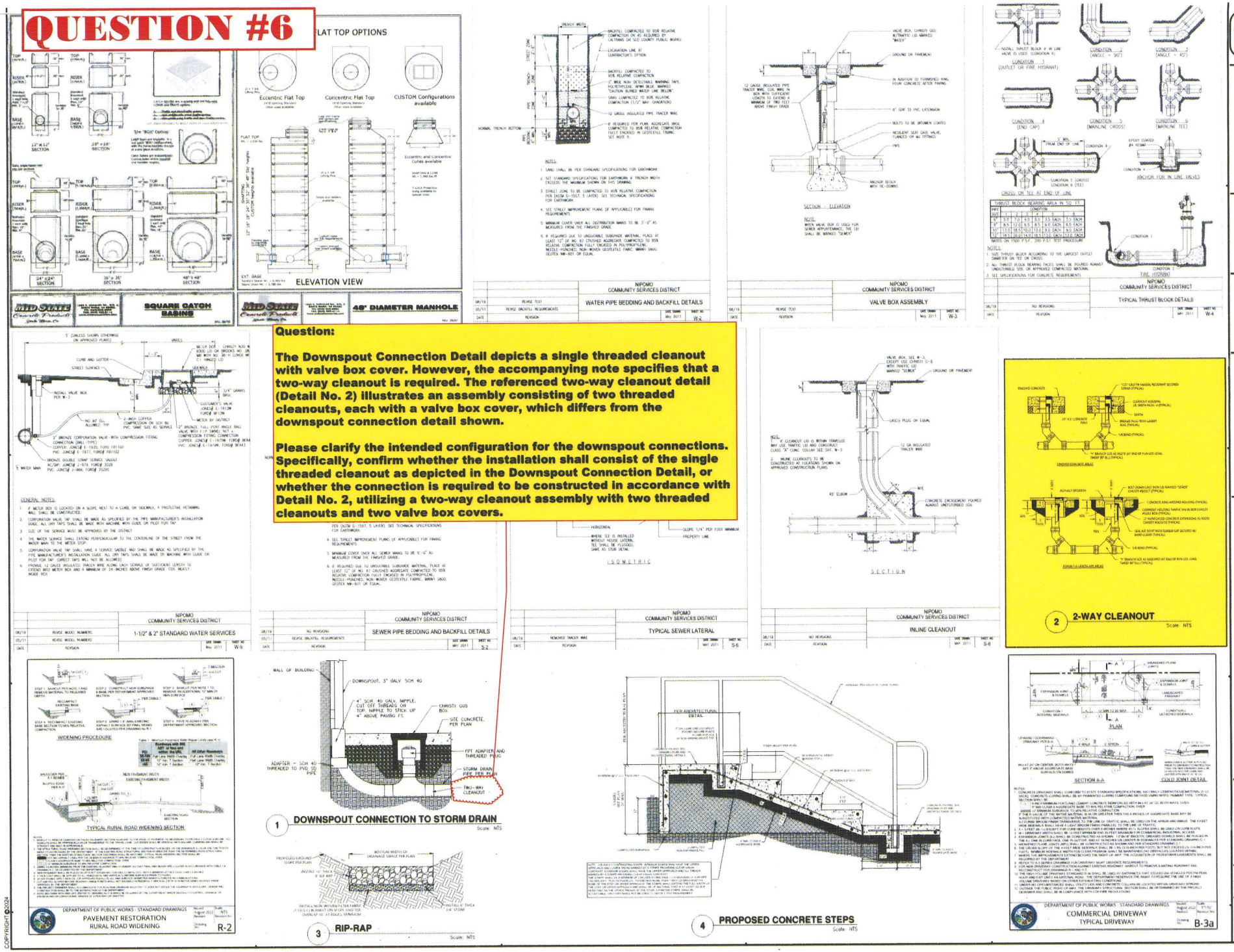

PRE-BID CLARIFICATION FORM (For Contractor's Use)

PROJECT NAME:	Dana Elementary 6 Classrooms		
PROJECT NUMBER:	0606		
		EMAIL:	prebidquestions@lmusd.org

DATE:	**7/28/2026**		
FROM:	**Butch Pope Engineering**	EMAIL:	**estimator@butchpopeconstruction.com**
DOCUMENT/DIVISION NUMBER:	**33-40-00**	DRAWING NUMBER:	**C-5**

REQUESTED CLARIFICATION:

The detail on Sheet C-5 identifies the proposed 48-inch Oldcastle Drywell Manhole for stormwater infiltration and depicts a standard perforated precast concrete drywell assembly. The referenced detail includes only the basic structural components of the drywell and does not indicate any proprietary Best Management Practice (BMP) pretreatment devices or water quality treatment components.

During the procurement process, a quotation was obtained directly from Oldcastle. The quotation included several proprietary BMP components that are not shown on the contract drawings or identified within the referenced manufacturer detail, including:

PureFlo Debris Shield
Flo Fast Drainage Screen
Hydrophobix Absorbent Pillow

These components function as stormwater pretreatment devices intended to remove debris, sediment, and hydrocarbon contaminants prior to infiltration into the surrounding soils. The quoted assembly, including these BMP components, resulted in a total cost exceeding $65,000 (excluding sales tax), representing a significant increase over the anticipated cost of a standard drywell system.

A review of the contract documents, including Specification Section 33 40 00 – Storm Drainage Utilities, does not identify these proprietary BMP pretreatment components as required.

Please confirm that the proposed drywell may be constructed in accordance with the standard Oldcastle 48-inch Drywell Manhole detail without the PureFlo Debris Shield, Flo Fast Drainage Screen, Hydrophobix Absorbent Pillow, or other proprietary BMP pretreatment components. If these components are required, please identify the applicable drawing, specification section, or project note that mandates their inclusion.

RESPONSE TO CLARIFICATION:

The proposed drywell is intended for infiltration purposes only. Based on our review of the plans and specifications, the BMP components included in the Oldcastle manhole are not required.

Attach additional numbered sheets as necessary; however, only one (1) request shall be contained on each submitted form.

Central Coast FENCE
Lic. #463992 • 805/481-1460
Fax 805/481-2405
540 S. 4th Street
Grover Beach, Ca 93433

RFI No. _1__

Project: Dana Elementary School – New Classrooms

Drawing Reference: Sheet A0.40 – Fence & Gate Details

Specification Reference: Section 32 31 20 – Ornamental Steel Fencing (Custom)

Subject: Clarification of Ornamental Fence Panel Configuration and Factory Finish

Request for Information:
The ornamental fence details on Sheet A0.40 identify the fence panels with **1-1/2" horizontal rails and 1" square pickets**.
Our review of commercially available ornamental fence systems indicates that standard manufactured panels are typically supplied with **1-1/2" rails and 3/4" square pickets**. Panels utilizing 1" square pickets generally require custom fabrication, resulting in increased material costs, extended fabrication lead times, and additional shop fabrication.
Additionally, **Specification Section 32 31 20, Paragraph 2.6 – Factory Finish**, requires the fence panels to be **hot-dip galvanized** prior to the finish coat. Commercially available ornamental fence systems are typically manufactured with a galvanized steel substrate and factory-applied powder coat finish but are not hot-dip galvanized after fabrication. Requiring hot-dip galvanizing after fabrication would significantly increase both material cost and procurement lead time.
Please clarify the following:
Will a **commercially available ornamental fence system** utilizing **1-1/2" rails and 3/4" square pickets** be accepted in lieu of custom-fabricated panels with 1" square pickets, provided all other design, structural, height, and finish requirements are maintained?
Is **hot-dip galvanizing after fabrication** a project requirement, or will a **standard commercially available galvanized and factory powder-coated ornamental fence system** be considered acceptable?
Clarification of these items prior to bid will allow bidders to accurately price the ornamental fencing and avoid unnecessary custom fabrication and extended material lead times.
Requested Response:
☒ Standard 1-1/2" rail / 3/4" picket ornamental fence system is acceptable.
☐ Custom 1" square pickets are required.
☐ Hot-dip galvanizing after fabrication is required.
☒ Standard galvanized and factory powder-coated ornamental fence system is acceptable.
☐ Other (please specify): _____

Please see "x's" in the appropriate boxes above to clarify scope.

J. Tischler
Finney Architects
8-6-26

PRE-BID CLARIFICATION FORM (For Contractor's Use)

PROJECT NAME:	Dana Elementary 6 Classrooms		
PROJECT NUMBER:	0606		
RFI #01		EMAIL:	prebidquestions@lmusd.org

DATE:	7-31-2026		
FROM:	Diani Building Corp	EMAIL:	estimating@diani.com
DOCUMENT/DIVISION NUMBER:		DRAWING NUMBER:	T1, A0.21, A0.30, A050

REQUESTED CLARIFICATION:

On sheets T1, A0.21 & A0.50 it calls out the play equipment, & basketball poles by play equipment manufacture. (Installed)
Is the play equipment, & basketball poles furnished and installed By Owner?
If not furnished and installed By Owner please provide manufacturers product data and contact information.
Also on sheet A0.30 details 7 & 8 call out Synthetic grass & poured in place surfacing by Others.
Is the Synthetic grass & poured in place surfacing by other?
If not please provide manufacturers product data and contact information.

RESPONSE TO CLARIFICATION:

"Playground area" refers to the rectangular area called out as a playground as shown on sheet T2. The scope responsibility for this area has been revised and is defined in the project summary contractor scope notes and on sheet T1 (included in this addendum) and detail 9/A0.50.

The basketball standards are not considered part of the playground and shall be provided and installed by the contractor. See 8/A0.50 for MFR and model.

The pour-in-place surfacing at the playground and synthetic turf surfacing outside of the playground are also defined in the project summary contractor scope notes on T1. This scope is by others. Contractor shall install paving and curbs surrounding/defining these areas, prepare the subgrade, and install base rock within these areas only, so that they are ready for play equipment and surfacing installation by others.

J. Tischler / Finney Architects / 19 August 2026

Attach additional numbered sheets as necessary; however, only one (1) request shall be contained on each submitted form.

PRE-BID CLARIFICATION FORM (For Contractor's Use)

PROJECT NAME:	Dana Elementary 6 Classrooms		
PROJECT NUMBER:	0606		
RFI #02		EMAIL:	prebidquestions@lmusd.org

DATE:	7-31-2026		
FROM:	Diani Building Corp	EMAIL:	estimating@diani.com
DOCUMENT/DIVISION NUMBER:	023000 subsurface investigation	DRAWING NUMBER:	

REQUESTED CLARIFICATION:

Requesting a electronic copy of the geotechnical report. (soils report)

RESPONSE TO CLARIFICATION:

The Geotechnical report has been issued in Addendum #1.

J. Tischler
Finney Architects
8-11-26

Attach additional numbered sheets as necessary; however, only one (1) request shall be contained on each submitted form.

PRE-BID CLARIFICATION FORM (For Contractor's Use)

PROJECT NAME:	Dana Elementary 6 Classrooms		
PROJECT NUMBER:	0606		
RFI #03		EMAIL:	prebidquestions@lmusd.org

DATE:	8-4-2026		
FROM:	Diani Building Corp	EMAIL:	estimating@diani.com
DOCUMENT/DIVISION NUMBER:		DRAWING NUMBER:	A9.4

REQUESTED CLARIFICATION:

)n sheet A9.4 details 1 & 2 call out vertical grain clear redwood fascia and trim (painted). The vertical grain clear redwood is 10 x the cost of con heart redwood and 7x the cost of treated FJ pine fascia & Trim.
Please note the vertical grain clear redwood only comes in random lengths 8,10,12,14,16 mixed.
Please advise if you want to substitute the vertical grain clear redwood fascia and trim for con heart redwood or treated FJ pine fascia & trim.

Note: Same thing on Nipomo high school classroom project,

RESPONSE TO CLARIFICATION:

Response:

We will use the VG Redwood fascia as specified as the basis of design, but may be open to other products depending on availability, such as engineered Western Red Cedar. Finger jointed Pine will not be acceptable.

J. Tischler
Finney Architects
8-6-26

Attach additional numbered sheets as necessary; however, only one (1) request shall be contained on each submitted form.

PRE-BID CLARIFICATION FORM (For Contractor's Use)

PROJECT NAME:	Dana Elementary 6 Classrooms		
PROJECT NUMBER:	0606		
RFI #04		EMAIL:	prebidquestions@lmusd.org

DATE:	8-5-2026		
FROM:	Diani Building Corp	EMAIL:	estimating@diani.com
DOCUMENT/DIVISION NUMBER:	085113	DRAWING NUMBER:	A6.2, A9.4

REQUESTED CLARIFICATION:

1 • Please provide a spec for the tubular skylights.
2 • Please confirm if screens are required for operable windows.
3 • The specified window, Wasau 2250i-Retro has a full-system u-value of 0.42, the best overall u-value that can be achieved is 0.31 with the Wasau 2250i-XP2. Please confirm which window we should bid.

RESPONSE TO CLARIFICATION:

1. The tubular skylights (Solatube) have been omitted from the project. See included in this addendum revised sheet A9.4, with detail omitted.
2. Screens are not required and would interfere with window operation.
3. The windows shall be bid as specified. See included in this addendum revised specification section 08 80 00 - Glass & Glazing, where the interspace gas has been specified which will help achieve a more efficient window assembly.

J. Tischler
Finney Architects
8-19-26

Attach additional numbered sheets as necessary; however, only one (1) request shall be contained on each submitted form.

PRE-BID CLARIFICATION FORM (For Contractor's Use)

PROJECT NAME:	Dana Elementary 6 Classrooms		
PROJECT NUMBER:	0606		
RFI #05		EMAIL:	prebidquestions@lmusd.org

DATE:	8-7-2026		
FROM:	Diani Building Corp	EMAIL:	estimating@diani.com
DOCUMENT/DIVISION NUMBER:		DRAWING NUMBER:	S2.3

REQUESTED CLARIFICATION:

1. Please confirm, On sheet S2.3 the diaphragm schedule calls for the roof system to be unblocked and with 1/2" CDX or OSB PL 24/0 Plywood. Is this correct?

RESPONSE TO CLARIFICATION:

1. The diaphragm shall be 1/2" CDX Plywood PL 24/0 blocked. See updated S2.3, attached. Also see wood specification section 3.9d) for additional requirements at sheathing joints.

Brian T. Dean, S.E.
T&S Structural
08/10/2026

Attach additional numbered sheets as necessary; however, only one (1) request shall be contained on each submitted form.

John Tischler

From: Prebid Questions <prebidquestions@lmusd.org>
Sent: Wednesday, August 05, 2026 2:26 PM
To: John Tischler
Subject: Fwd: Dana Elementary

---------- Forwarded message ---------
From: **robb ellis** <i520865@thegrid.net>
Date: Sat, Aug 1, 2026 at 8:35 AM
Subject: Dana Elementary
To: <prebidquestions@lmusd.org>

At all four corners of each building is a cantilevered 710 psl. For a full bearing seat cut on the 2x8 wall (1-S3.2) given a 4/12 pitch there would be a 2.5 inch deep seat cut on each 2x10 rafter. Can we clip the wall down 2.5 inches for the 710 beam or rip the beam down to 7.5 inches over the wall

robert ellis
gemini framing
lic 421657
framing san luis obispo
805.431.0758

RESPONSE TO CLARIFICATION:

PSL beams at corners updated to 7"x14" PSL, notched to fit geometry. See detail 13/S3.2 for the wall corners, and 30/S3.2 for the overhang.

Brian T. Dean, S.E.
T&S Structural
08/07/2026

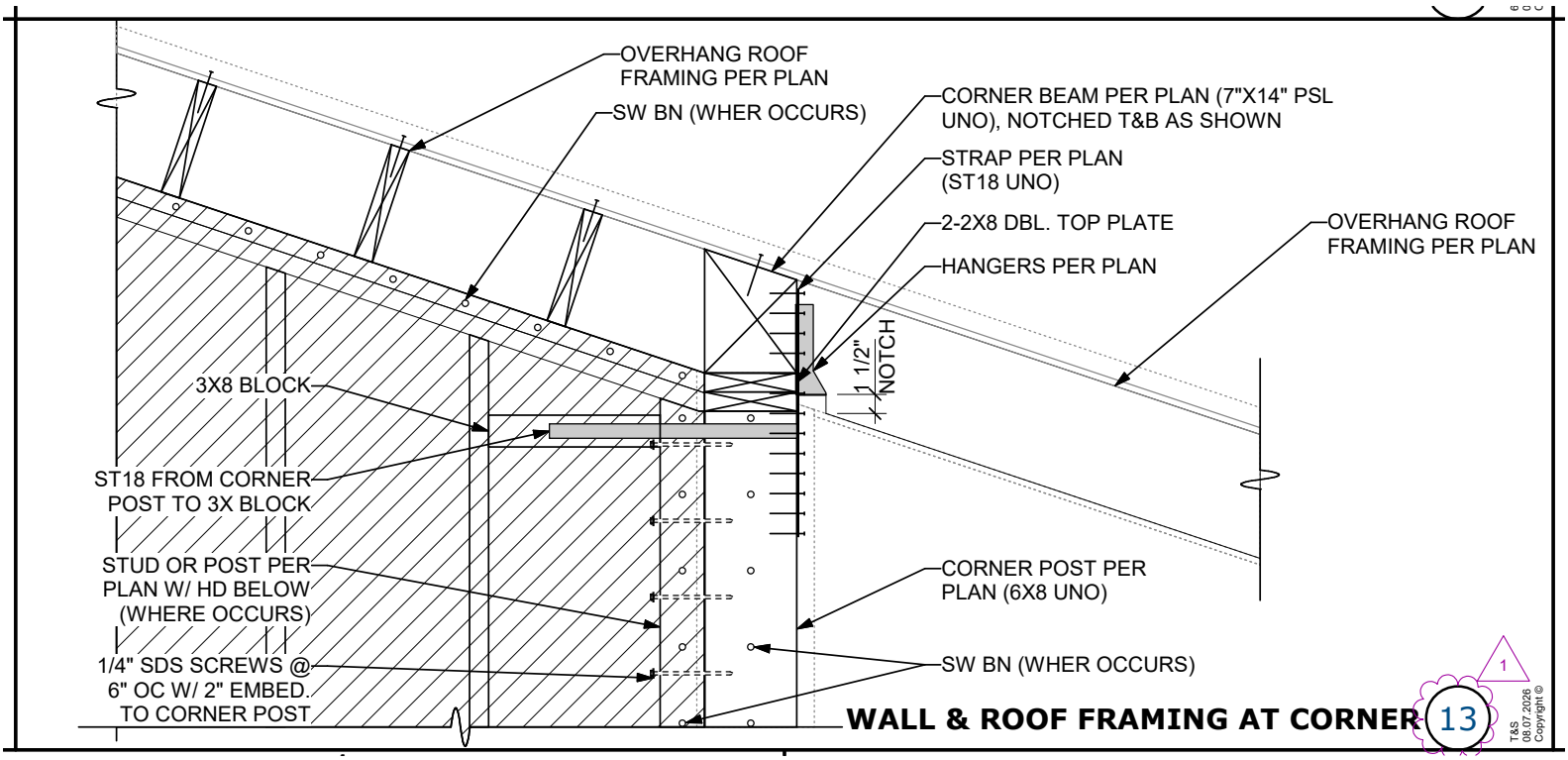
OVERHANG ROOF FRAMING PER PLAN
SW BN (WHER OCCURS)
CORNER BEAM PER PLAN (7"X14" PSL UNO), NOTCHED T&B AS SHOWN
STRAP PER PLAN (ST18 UNO)
2-2X8 DBL. TOP PLATE
HANGERS PER PLAN
OVERHANG ROOF FRAMING PER PLAN
1 1/2" NOTCH
3X8 BLOCK
ST18 FROM CORNER POST TO 3X BLOCK
STUD OR POST PER PLAN W/ HD BELOW (WHERE OCCURS)
1/4" SDS SCREWS @ 6" OC W/ 2" EMBED. TO CORNER POST
CORNER POST PER PLAN (6X8 UNO)
SW BN (WHER OCCURS)
WALL & ROOF FRAMING AT CORNER
13
1
T&S
08.07.2026
Copyright ©

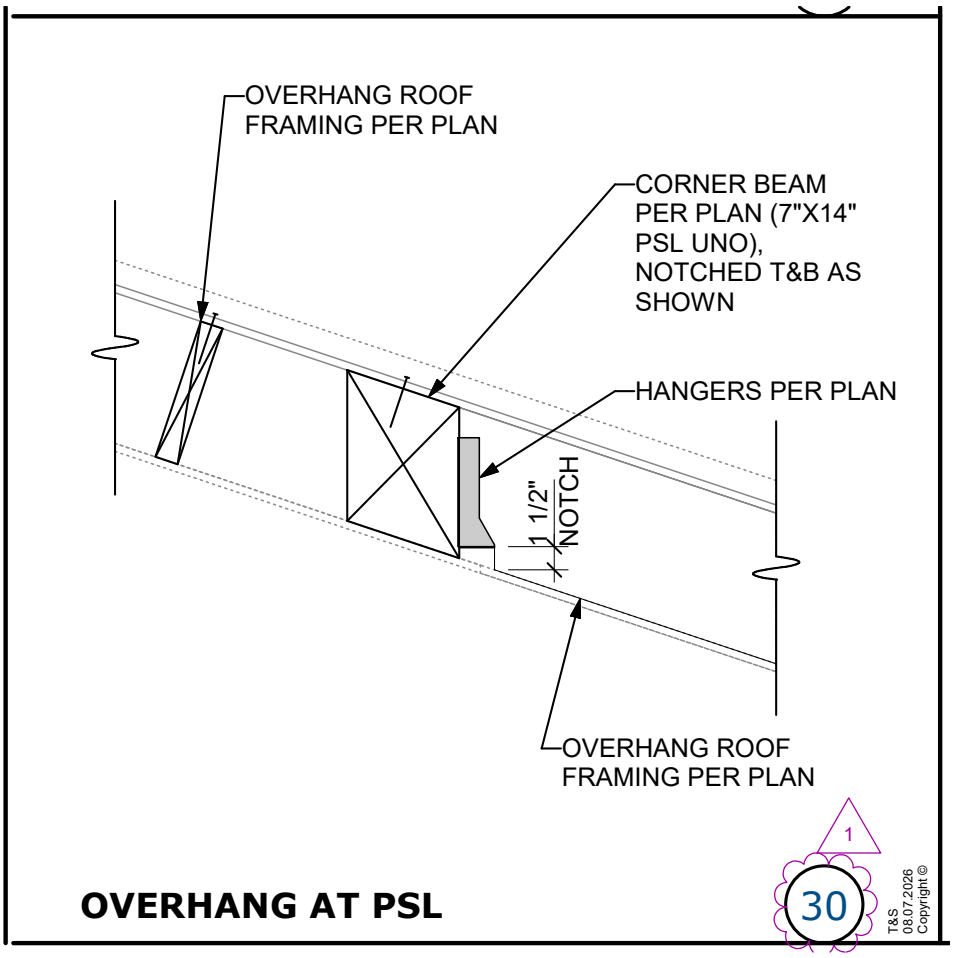
OVERHANG ROOF FRAMING PER PLAN
CORNER BEAM PER PLAN (7"X14" PSL UNO), NOTCHED T&B AS SHOWN
HANGERS PER PLAN
1 1/2" NOTCH
OVERHANG ROOF FRAMING PER PLAN
OVERHANG AT PSL
30
1
T&S
08.07.2026
Copyright ©

John Tischler

From: Prebid Questions <prebidquestions@lmusd.org>
Sent: Wednesday, August 05, 2026 2:27 PM
To: John Tischler
Subject: Fwd: Dana Elementary

---------- Forwarded message ---------
From: **robb ellis** <i520865@thegrid.net>
Date: Mon, Aug 3, 2026 at 5:44 AM
Subject: Dana Elementary
To: <prebidquestions@lmusd.org>

The structural elevations s2.4 and s2.5 show a strap across the headers with a 24" strap overlap onto each side of the header but the call out is a 36" strap please confirm a longer strap or shorter overlap. In addition with a recessed or centered header we will need a spacer or filler for said strap backing. please provide a detail for this attachment.

robert ellis
gemini framing
lic 421657
framing san luis obispo
805.431.0758

RESPONSE TO CLARIFICATION:

The 24" lap only applies to the CMSTC16 straps that occur in sections on S2.4 & S2.5 For the MSTA36 straps, center them on the post (18" lap).

For simplicity, wood headers shall be flush with the outside face of wall. See updated detail 20/S3.2 (note the additional filler block at the inside face of wall).

Brian T. Dean, S.E.
T&S Structural
08/07/2026

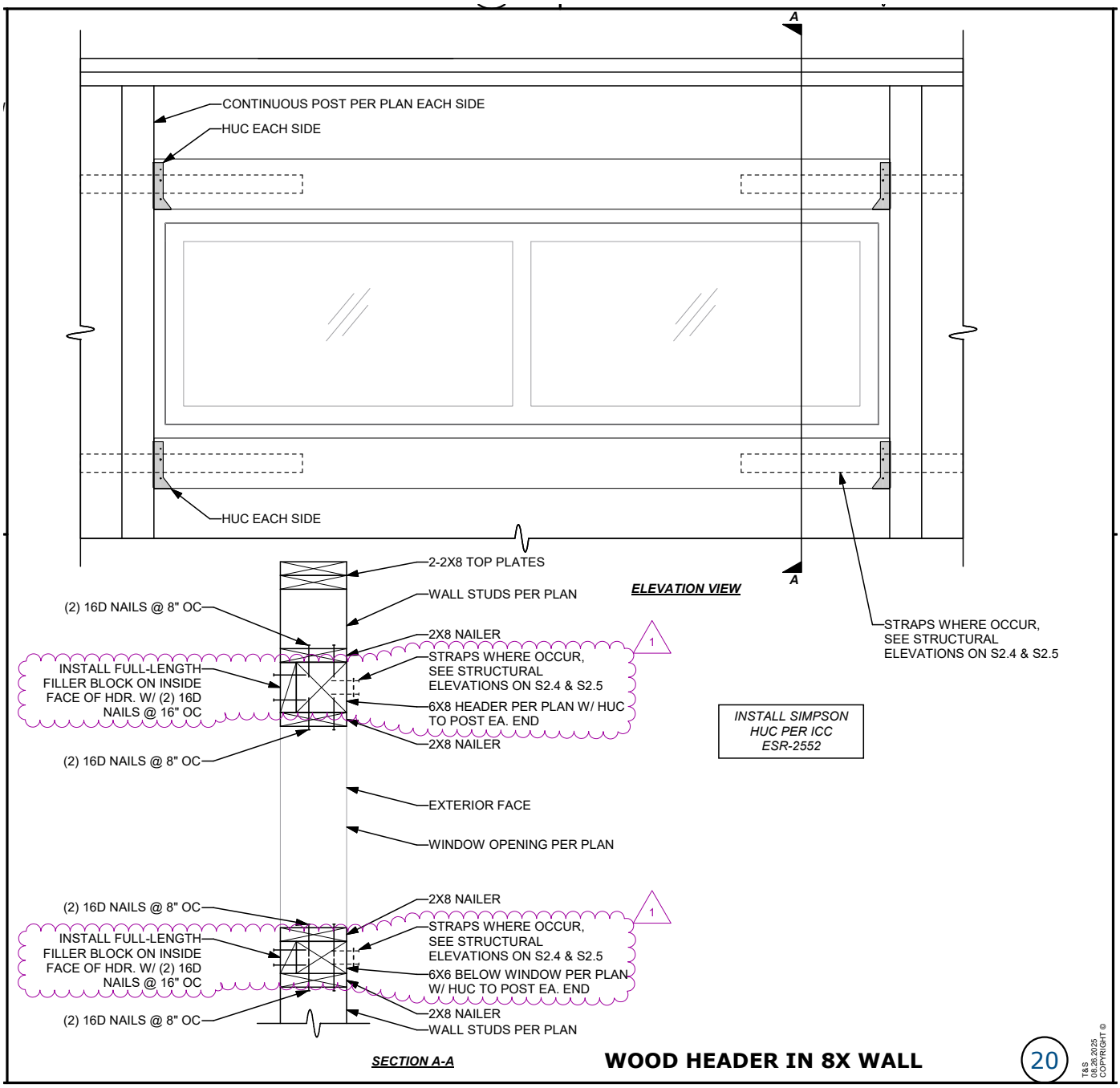
A
CONTINUOUS POST PER PLAN EACH SIDE
HUC EACH SIDE
HUC EACH SIDE
A
ELEVATION VIEW
STRAPS WHERE OCCUR, SEE STRUCTURAL ELEVATIONS ON S2.4 & S2.5
2-2X8 TOP PLATES
WALL STUDS PER PLAN
(2) 16D NAILS @ 8" OC
2X8 NAILER
1
INSTALL FULL-LENGTH FILLER BLOCK ON INSIDE FACE OF HDR. W/ (2) 16D NAILS @ 16" OC
STRAPS WHERE OCCUR, SEE STRUCTURAL ELEVATIONS ON S2.4 & S2.5
6X8 HEADER PER PLAN W/ HUC TO POST EA. END
2X8 NAILER
(2) 16D NAILS @ 8" OC
INSTALL SIMPSON HUC PER ICC ESR-2552
EXTERIOR FACE
WINDOW OPENING PER PLAN
(2) 16D NAILS @ 8" OC
2X8 NAILER
1
INSTALL FULL-LENGTH FILLER BLOCK ON INSIDE FACE OF HDR. W/ (2) 16D NAILS @ 16" OC
STRAPS WHERE OCCUR, SEE STRUCTURAL ELEVATIONS ON S2.4 & S2.5
6X6 BELOW WINDOW PER PLAN W/ HUC TO POST EA. END
2X8 NAILER
(2) 16D NAILS @ 8" OC
WALL STUDS PER PLAN
SECTION A-A
WOOD HEADER IN 8X WALL
20
T&S
08.26.2025
COPYRIGHT ©

DEMOLITION NOTES

1. PROTECT IN PLACE EXISTING WATER VALVES
2. REMOVE PLAYGROUND EQUIPMENT, CURB, AND SURFACING
3. REMOVE ABANDONED CONCRETE FILLED UNDERGROUND SEPTIC TANK, AND ALL ASSOCIATED PIPES.
4. REMOVE ABANDONED SEPTIC LEACH LINES
5. PROTECT IN PLACE FENCE
6. REMOVE IRRIGATION LINE
7. PROTECT IN PLACE EXISTING SEWER MANHOLE
8. REMOVE ASPHALT
9. REMOVE AND SALVAGE IN GROUND BASKETBALL HOOP
10. PROTECT IN PLACE EXISTING FIRE HYDRANT
11. PROTECT IN PLACE IRRIGATION LINE
12. DEMOLISH CONCRETE LANDING
13. PROTECT IN PLACE EXISTING A/C ENCLOSURE
14. CLEAR AND GRUB AND PREPARE FOR GRADING AND NEW IMPROVEMENTS
15. PROTECT IN PLACE EXISTING DECOMPOSED GRANITE
16. EXISTING UNDERGROUND SEPTIC TANK TO REMAIN (2)
17. PROTECT IN PLACE SEWER CLEANOUT
18. DEMOLISH FENCE POST TO POST
19. PROTECT IN PLACE EXISTING STRIPING.
20. PROTECT IN PLACE EXISTING BALL WALL.
21. PROTECT IN PLACE EXISTING BASKETBALL POLE
22. GENERAL CONTRACTOR RELOCATE (3) SHIPPING CONTAINERS AND (2) TUFF SHEDS ON SITE PER DISTRICT DIRECTION. SEE A0.2 FOR LOCATION.
23. REMOVE CONCRETE CURB AND SIDEWALK

LEGEND

- REMOVE ASPHALT
- CLEAR AND GRUB, PREPARE FOR GRADING AND NEW IMPROVEMENTS
- REMOVE CONCRETE

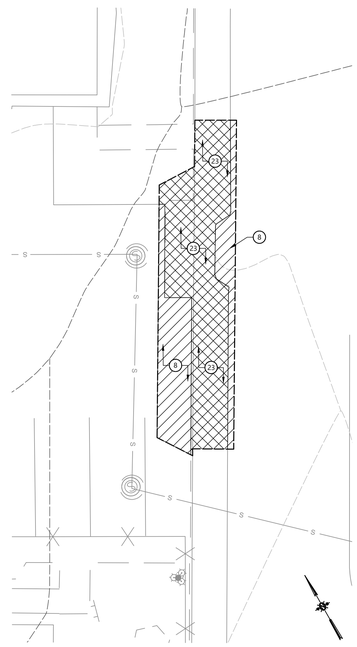

DRIVEWAY APPROACH REMOVAL

SCALE: 1"=10'

10' 0' 10' 20'

SCALE: 1" = 10'

(DSA STAMP AREA)

FINNEY ARCHITECTS
2155 SOUTH BASCOM AVE.
SUITE 250
CAMPBELL, CA 95008
PHONE: 408-398-1450

REGISTERED PROFESSIONAL ENGINEER
DAVID W. CHANLEY
NO. 70849
CIVIL
STATE OF CALIFORNIA

CLAD

DEMOLITION PLAN

NEW CLASSROOMS AT
DANA ELEMENTARY SCHOOL
920 W TEFFT STREET, NIPOMO, CALIFORNIA 93444
LUCIA MAR UNIFIED SCHOOL DISTRICT

REVISIONS

NO.	ITEM	DATE
2	ADDENDUM 2	08/19/26

DRAWN BY:	EP
CHECKED BY:	AG, DC
PROJECT NO:	DATE:
24075	DSA V3 SUBMITTAL: 05/28/2026

C2

COPYRIGHT © 2024

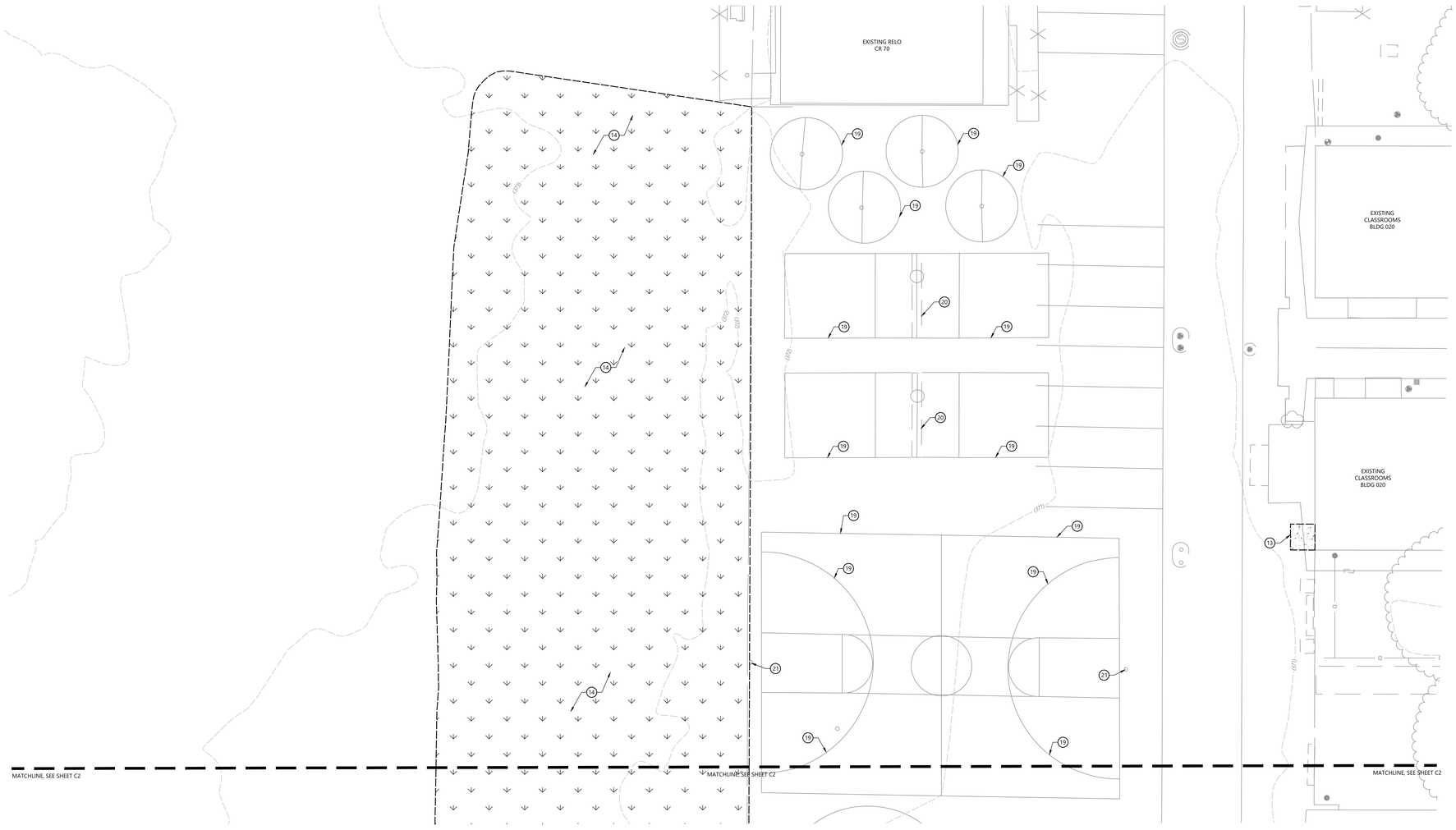

DEMOLITION NOTES

1. PROTECT IN PLACE EXISTING WATER VALVES
2. REMOVE PLAYGROUND EQUIPMENT, CURB, AND SURFACING
3. REMOVE ABANDONED CONCRETE FILLED UNDERGROUND SEPTIC TANK, AND ALL ASSOCIATED PIPES.
4. REMOVE ABANDONED SEPTIC LEACH LINES
5. PROTECT IN PLACE FENCE
6. REMOVE IRRIGATION LINE
7. PROTECT IN PLACE EXISTING SEWER MANHOLE
8. REMOVE ASPHALT
9. REMOVE AND SALVAGE IN GROUND BASKETBALL HOOP
10. PROTECT IN PLACE EXISTING FIRE HYDRANT
11. PROTECT IN PLACE IRRIGATION LINE
12. DEMOLISH CONCRETE LANDING
13. PROTECT IN PLACE EXISTING A/C ENCLOSURE
14. CLEAR AND GRUB AND PREPARE FOR GRADING AND NEW IMPROVEMENTS
15. PROTECT IN PLACE EXISTING DECOMPOSED GRANITE
16. EXISTING UNDERGROUND SEPTIC TANK TO REMAIN (2)
17. PROTECT IN PLACE SEWER CLEANOUT
18. DEMOLISH FENCE
19. PROTECT IN PLACE EXISTING STRIPING.
20. PROTECT IN PLACE EXISTING BALL WALL.
21. PROTECT IN PLACE EXISTING BASKETBALL POLE
22. GENERAL CONTRACTOR RELOCATE (3) SHIPPING CONTAINERS AND (2) TUFF SHEDS ON SITE PER DISTRICT DIRECTION. SEE A0.2 FOR LOCATION.
23. REMOVE CONCRETE CURB AND SIDEWALK

LEGEND

REMOVE ASPHALT

CLEAR AND GRUB, PREPARE FOR GRADING AND NEW IMPROVEMENTS

REMOVE CONCRETE

10' 0' 10' 20'

SCALE: 1" = 10'

(DSA STAMP AREA)

FINNEY ARCHITECTS
2155 SOUTH BASCOM AVE.
SUITE 250
CAMPBELL, CA 95008
PHONE: 408-398-1450

REGISTERED PROFESSIONAL ENGINEER
DAVID W. CHANLEY
NO. 70849
CIVIL
STATE OF CALIFORNIA

CLAD

DEMOLITION PLAN

NEW CLASSROOMS AT
DANA ELEMENTARY SCHOOL
920 W TEFFT STREET, NIPOMO, CALIFORNIA 93444
LUCIA MAR UNIFIED SCHOOL DISTRICT

REVISIONS

NO.	ITEM	DATE
2	ADDENDUM 2	08/19/26

DRAWN BY:	EP
CHECKED BY:	AG, DC
PROJECT NO:	DATE:
24075	DSA V3 SUBMITTAL: 05/28/2026

C3

COPYRIGHT © 2024

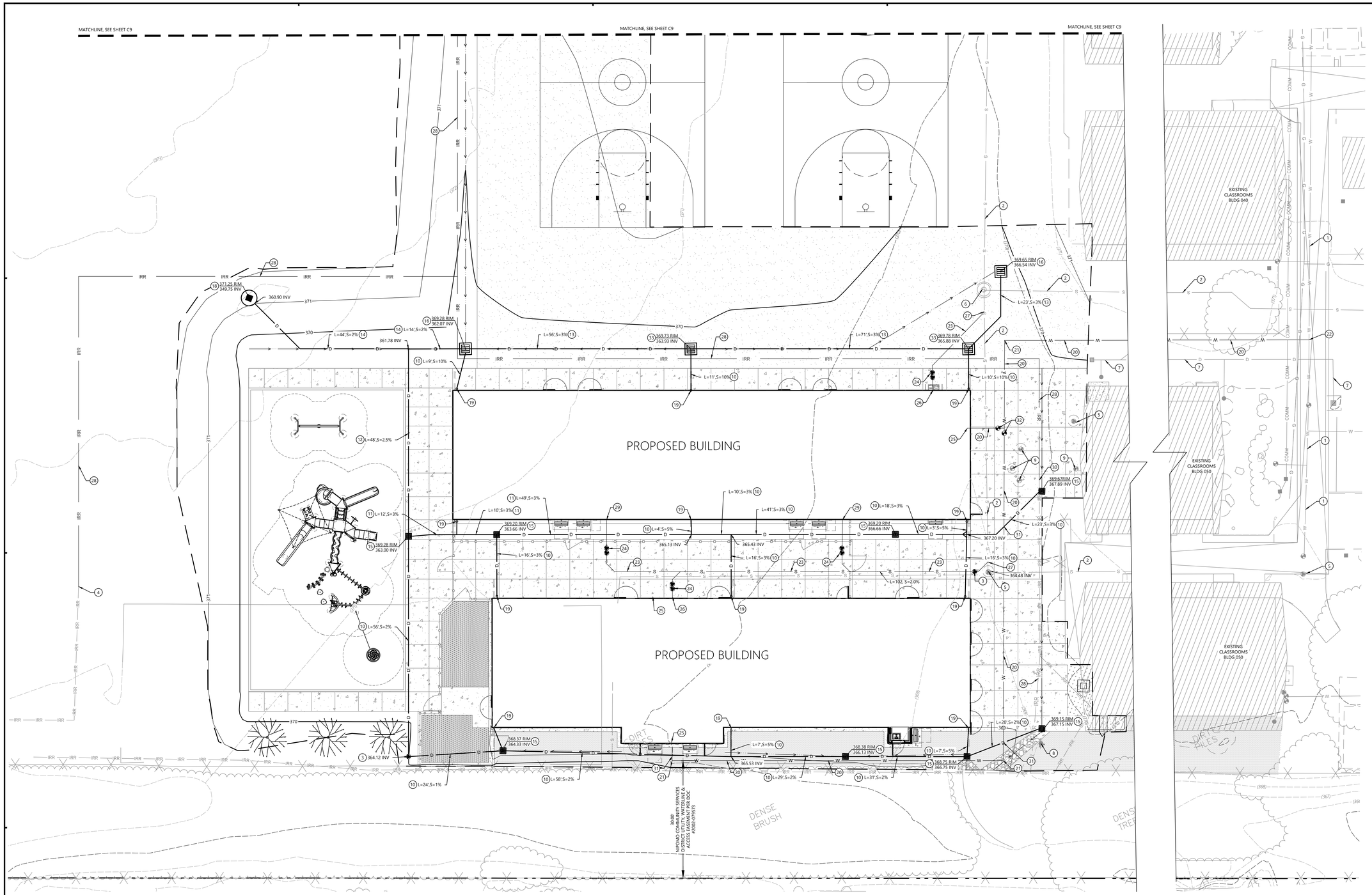

CONSTRUCTION NOTES

1. EXISTING 4" C900 PVC WATERLINE TO REMAIN
2. EXISTING 6" PVC SS TO REMAIN
3. INSTALL ONE-WAY SEWER CLEAN OUT . INSTALLATION OF CLEANOUT TO BE PER NIPOMO COMMUNITY SERVICE DISTRICT DETAIL S-8 ON SHEET C11. INSTALL CONCRETE COLLARS ON ALL CLEANOUTS.
4. CONTRACTOR TO VERIFY LOCATION OF EXISTING IRRIGATION LINE FOR NEW TIE-IN.
5. EXISTING SEWER CLEANOUT TO REMAIN, LID TO BE ADJUSTED TO PROPOSED GRADE
6. EXISTING SEWER MANHOLE TO REMAIN, RIM ELEVATION TO BE ADJUSTED TO PROPOSED GRADE.
7. EXISTING STORM DRAIN TO REMAIN
8. EXISTING FIRE HYDRANT TO REMAIN
9. EXISTING WATER VALVE TO REMAIN, LID TO BE ADJUSTED TO PROPOSED GRADE
10. PROPOSED 4" PVC STORM DRAIN PIPE, LENGTH AND SLOPE PER PLAN.
11. PROPOSED 6" PVC STORM DRAIN PIPE, LENGTH AND SLOPE PER PLAN.
12. PROPOSED 8" HDPE STORM DRAIN PIPE, LENGTH AND SLOPE PER PLAN.
13. PROPOSED 12" HDPE STORM DRAIN PIPE, LENGTH AND SLOPE PER PLAN.
14. PROPOSED 18" HDPE STORM DRAIN PIPE, LENGTH AND SLOPE PER PLAN.
15. PROPOSED 12"x12" MIDSTATE CONCRETE CATCH BASIN OR APPROVED EQUAL, ON SHEET C11. USE GRATE DESIGNED TO RESIST ENTRY OF HIGH HEELED SHOES.
16. PROPOSED 24"x24" MIDSTATE CONCRETE CATCH BASIN OR APPROVED EQUAL, ON SHEET C11. USE GRATE DESIGNED TO RESIST ENTRY OF HIGH HEELED SHOES.

2

17. NOT USED
18. PROPOSED 48" CONCRETE DRYWELL. INSTALL DRYWELL BASE (5FT) , AND TWO DRYWELL RISERS (10FT) ALONG WITH CONCENTRIC CONE (3FT) WITH RISERS AND FRAME AND COVER TO MEET GRADE. RIM AND INVERT PER PLAN. SEE DRYWELL DETAILS ON SHEET C5.
19. INSTALL DOWNSPOUT CONNECTION TO STORM DRAIN PER DETAIL 1 ON SHEET C11.
20. INSTALL 2" SCH 80 PVC DOMESTIC WATERLINE. SEE NIPOMO COMMUNITY SERVICE DISTRICT DETAIL W-2 FOR WATER PIPE BEDDING AND TRENCH BACKFILL DETAIL ON SHEET C11.
21. PROPOSED TRUST BLOCK FOR WATERLINE INSTALLATION PER NIPOMO COMMUNITY SERVICE DISTRICT DETAIL W-4 FOR TYPICAL TRUST BLOCK DETAILS ON SHEET C11.
22. PROPOSED WATERLINE TIE IN TO EXISTING 4" C900 PVC WATERLINE MAIN PER NIPOMO COMMUNITY SERVICE DISTRICT DETAIL W-9 ON SHEET C11.
23. INSTALL 4" SDR 35 SANITAY SEWER. SEE NIPOMO COMMUNITY SERVICE DISTRICT DETAIL S-2 FOR SEWER PIPE BEDDING AND TRENCH BACKFILL DETAIL ON SHEET C11.
24. INSTALL TWO-WAY SEWER CLEAN OUT . INSTALLATION OF CLEANOUT TO BE PER NIPOMO COMMUNITY SERVICE DISTRICT DETAIL S-8 AND DETAIL 2 ON SHEET C11. INSTALL CONCRETE COLLARS ON ALL CLEANOUTS.
25. PROPOSED WATERLINE POINT OF CONNECTION AT PROPOSED BUILDING, SEE PLUMBING PLAN FOR ADDITIONAL INFORMATION.
26. PROPOSED SANITARY SEWER POINT OF CONNECTION AT PROPOSED BUILDING, SEE PLUMBING PLAN FOR ADDITIONAL INFORMATION.
27. SANITARY SEWER TO TIE INTO EXISTING SEWER MAIN PER NIPOMO COMMUNITY SERVICE DISTRICT DETAIL S-6 FOR TYPICAL SEWER LATERAL ON SHEET C11.
28. NEW IRRIGATION MAINLINE BY OWNER. CONTRACTOR SHALL TRENCH AND BACKFILL ONLY PER DETAIL W-2, SEE SHEET C11.
29. INSTALL 2" SDR 35 SANITAY SEWER. SEE NIPOMO COMMUNITY SERVICE DISTRICT DETAIL S-2 FOR SEWER PIPE BEDDING AND TRENCH BACKFILL DETAIL ON SHEET C11.
30. NEW IRRIGATION MAINLINE TO TIE INTO EXISTING BY OWNER. CONTRACTOR SHALL TRENCH AND BACKFILL ONLY PER DETAIL W-2, SEE SHEET C11.
31. WATER LINE CROSSING UNDER PROPOSED STORM DRAIN WITH 1' MIN. SEPARATION.
32. INSTALL WATERLINE VALVE WITH VALVE ASSEMBLY PER NIPOMO COMMUNITY SERVICE DISTRICT DETAIL W-3, SEE SHEET C11.
33. PROPOSED 18"X18" MIDSTATE CONCRETE CATCH BASIN OR APPROVED EQUAL, ON SHEET C11. USE GRATE DESIGNED TO RESIST ENTRY OF HIGH HEELED SHOES.

NOTE: EXISTING UTILITIES HAVE SHOWN PER TOPOGRAPHIC SURVEY AND AS-BUILT INFORMATION. CONTRACTOR TO VERIFY SIZE AND LOCATION OF ALL EXISTING UTILITIES BEFORE INSTALLATION OF PROPOSED UTILITIES.

NOTE: ALL EXISTING UTILITY BOXES, LIDS, OR GRATES WITHIN THE AREA OF NEW IMPROVEMENTS SHALL BE ADJUSTED TO NEW GRADES. REGARDLESS IF SHOWN GRAPHICALLY OR NOT.

LEGEND

- EXISTING SEWER MANHOLE
- FIRE HYDRANT
- EXISTING SEWER CLEANOUT
- ONE-WAY SEWER CLEANOUT
- TWO-WAY SEWER CLEANOUT
- EXISTING WATER VALVE
- PROPOSED WATER VALVE
- PROPOSED STORM DRAIN CATCH BASIN
- D — STORM DRAIN (SIZE PER PLAN)
- SS — SANITARY SEWER (SIZE PER PLAN)
- W — WATER LINE (SIZE PER PLAN)
- G — GAS LINE
- E — ELECTRICAL
- IRR — IRRIGATION LINE
- PROPOSED ASPHALT CONCRETE
- PROPOSED CONCRETE
- PROPOSED SYNTHETIC TURF
- EXISTING BUILDINGS

10' 0' 10' 20'

SCALE: 1" = 10'

COPYRIGHT © 2024

(DSA STAMP AREA)

FINNEY ARCHITECTS
2155 SOUTH BASCOM AVE,
SUITE 250
CAMPBELL, CA 95008
PHONE: 408-398-1450

REGISTERED PROFESSIONAL ENGINEER
DAVID W. CHANLEY
NO 70849
CIVIL
STATE OF CALIFORNIA

CLAD

UTILITY PLAN

NEW CLASSROOMS AT
DANA ELEMENTARY SCHOOL
920 W TEFFT STREET, NIPOMO, CALIFORNIA 93444
LUCIA MAR UNIFIED SCHOOL DISTRICT

REVISIONS

NO.	ITEM	DATE
2	ADDENDUM 2	08/19/26

DRAWN BY: EP
CHECKED BY: AG, DC
PROJECT NO: DATE:
24075 DSA V3 SUBMITTAL: 05/28/2026

C8

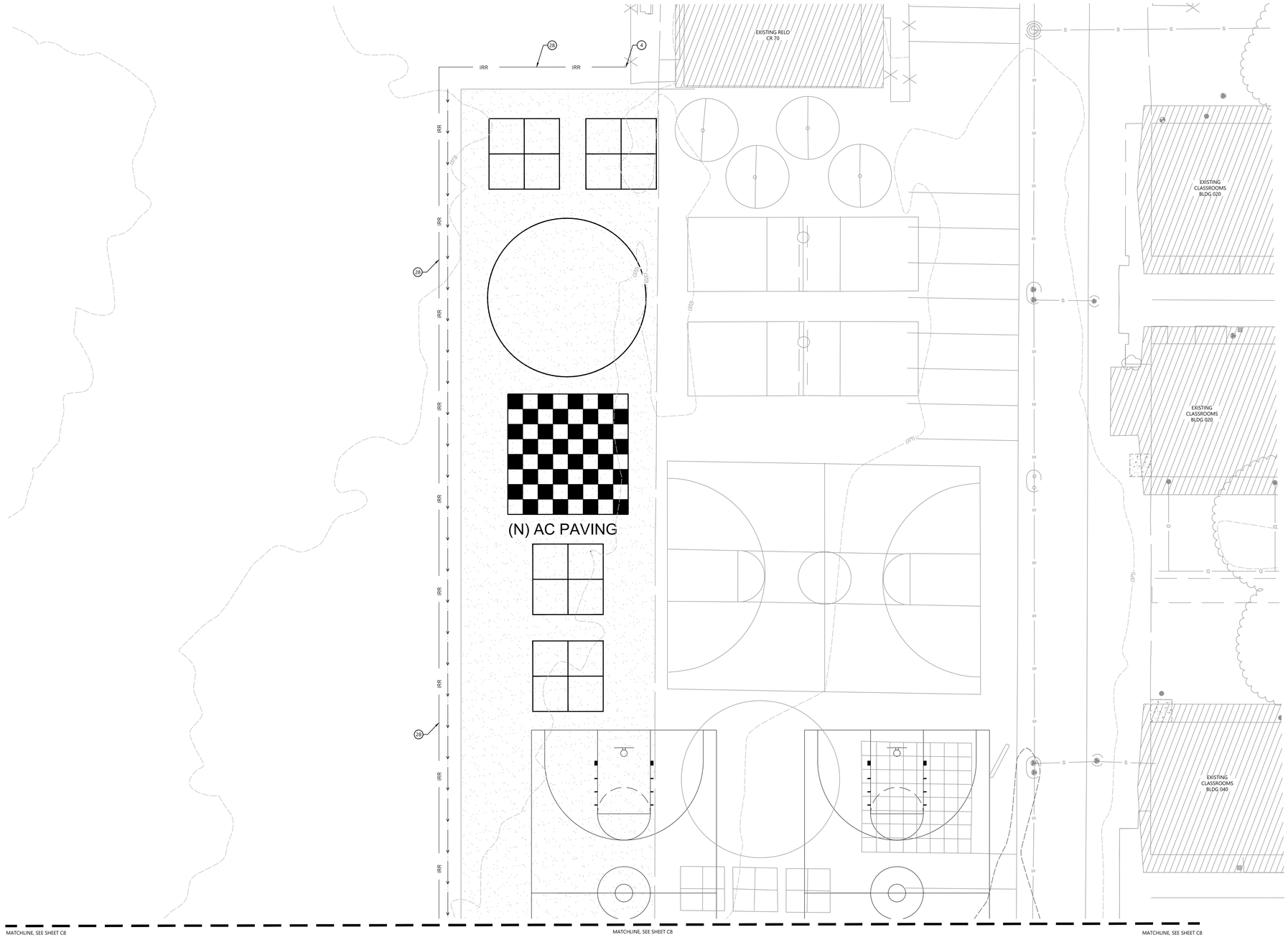

CONSTRUCTION NOTES

1. EXISTING 4" C900 PVC WATERLINE TO REMAIN
2. EXISTING 6" PVC SS TO REMAIN
3. INSTALL ONE-WAY SEWER CLEAN OUT . INSTALLATION OF CLEANOUT TO BE PER NIPOMO COMMUNITY SERVICE DISTRICT DETAIL S-8 ON SHEET C11. INSTALL CONCRETE COLLARS ON ALL CLEANOUTS.
4. CONTRACTOR TO VERIFY LOCATION OF EXISTING IRRIGATION LINE FOR NEW TIE-IN.
5. EXISTING SEWER CLEANOUT TO REMAIN, LID TO BE ADJUSTED TO PROPOSED GRADE
6. EXISTING SEWER MANHOLE TO REMAIN, RIM ELEVATION TO BE ADJUSTED TO PROPOSED GRADE.
7. EXISTING STORM DRAIN TO REMAIN
8. EXISTING FIRE HYDRANT TO REMAIN
9. EXISTING WATER VALVE TO REMAIN, LID TO BE ADJUSTED TO PROPOSED GRADE
10. PROPOSED 4" PVC STORM DRAIN PIPE, LENGTH AND SLOPE PER PLAN.
11. PROPOSED 6" PVC STORM DRAIN PIPE, LENGTH AND SLOPE PER PLAN.
12. PROPOSED 8" HDPE STORM DRAIN PIPE, LENGTH AND SLOPE PER PLAN.
13. PROPOSED 12" HDPE STORM DRAIN PIPE, LENGTH AND SLOPE PER PLAN.
14. PROPOSED 18" HDPE STORM DRAIN PIPE, LENGTH AND SLOPE PER PLAN.
15. PROPOSED 12"x12" MIDSTATE CONCRETE CATCH BASIN OR APPROVED EQUAL, ON SHEET C11. USE GRATE DESIGNED TO RESIST ENTRY OF HIGH HEELED SHOES.
16. PROPOSED 24"x24" MIDSTATE CONCRETE CATCH BASIN OR APPROVED EQUAL, ON SHEET C11. USE GRATE DESIGNED TO RESIST ENTRY OF HIGH HEELED SHOES.

2

17. NOT USED
18. PROPOSED 48" CONCRETE DRYWELL. INSTALL DRYWELL BASE (5FT) , AND TWO DRYWELL RISERS (10FT) ALONG WITH CONCENTRIC CONE (3FT) WITH RISERS AND FRAME AND COVER TO MEET GRADE. RIM AND INVERT PER PLAN. SEE DRYWELL DETAILS ON SHEET C5.
19. INSTALL DOWNSPOUT CONNECTION TO STORM DRAIN PER DETAIL 1 ON SHEET C11.
20. INSTALL 2" SCH 80 PVC DOMESTIC WATERLINE. SEE NIPOMO COMMUNITY SERVICE DISTRICT DETAIL W-2 FOR WATER PIPE BEDDING AND TRENCH BACKFILL DETAIL ON SHEET C11.
21. PROPOSED TRUST BLOCK FOR WATERLINE INSTALLATION PER NIPOMO COMMUNITY SERVICE DISTRICT DETAIL W-4 FOR TYPICAL TRUST BLOCK DETAILS ON SHEET C11.
22. PROPOSED WATERLINE TIE IN TO EXISTING 4" C900 PVC WATERLINE MAIN PER NIPOMO COMMUNITY SERVICE DISTRICT DETAIL W-9 ON SHEET C11.
23. INSTALL 4" SDR 35 SANITAY SEWER. SEE NIPOMO COMMUNITY SERVICE DISTRICT DETAIL S-2 FOR SEWER PIPE BEDDING AND TRENCH BACKFILL DETAIL ON SHEET C11.
24. INSTALL TWO-WAY SEWER CLEAN OUT . INSTALLATION OF CLEANOUT TO BE PER NIPOMO COMMUNITY SERVICE DISTRICT DETAIL S-8 AND DETAIL 2 ON SHEET C11. INSTALL CONCRETE COLLARS ON ALL CLEANOUTS.
25. PROPOSED WATERLINE POINT OF CONNECTION AT PROPOSED BUILDING, SEE PLUMBING PLAN FOR ADDITIONAL INFORMATION.
26. PROPOSED SANITARY SEWER POINT OF CONNECTION AT PROPOSED BUILDING, SEE PLUMBING PLAN FOR ADDITIONAL INFORMATION.
27. SANITARY SEWER TO TIE INTO EXISTING SEWER MAIN PER NIPOMO COMMUNITY SERVICE DISTRICT DETAIL S-6 FOR TYPICAL SEWER LATERAL ON SHEET C11.
28. NEW IRRIGATION MAINLINE BY OWNER. CONTRACTOR SHALL TRENCH AND BACKFILL ONLY PER DETAIL W-2, SEE SHEET C11.
29. INSTALL 2" SDR 35 SANITAY SEWER. SEE NIPOMO COMMUNITY SERVICE DISTRICT DETAIL S-2 FOR SEWER PIPE BEDDING AND TRENCH BACKFILL DETAIL ON SHEET C11.
30. NEW IRRIGATION MAINLINE TO TIE INTO EXISTING BY OWNER. CONTRACTOR SHALL TRENCH AND BACKFILL ONLY PER DETAIL W-2, SEE SHEET C11.
31. UTILITY CROSSING PER NIPOMO COMMUNITY SERVICE DISTRICT DETAIL W-18.
32. INSTALL WATERLINE VALVE WITH VALVE ASSEMBLY PER NIPOMO COMMUNITY SERVICE DISTRICT DETAIL W-3, SEE SHEET C11.
33. PROPOSED 18"X18" MIDSTATE CONCRETE CATCH BASIN OR APPROVED EQUAL, ON SHEET C11. USE GRATE DESIGNED TO RESIST ENTRY OF HIGH HEELED SHOES.

NOTE: EXISTING UTILITIES HAVE SHOWN PER TOPOGRAPHIC SURVEY AND AS-BUILT INFORMATION. CONTRACTOR TO VERIFY SIZE AND LOCATION OF ALL EXISTING UTILITIES BEFORE INSTALLATION OF PROPOSED UTILITIES.

NOTE: ALL EXISTING UTILITY BOXES, LIDS, OR GRATES WITHIN THE AREA OF NEW IMPROVEMENTS SHALL BE ADJUSTED TO NEW GRADES. REGARDLESS IF SHOWN GRAPHICALLY OR NOT.

LEGEND

- EXISTING SEWER MANHOLE
- FIRE HYDRANT
- EXISTING SEWER CLEANOUT
- ONE-WAY SEWER CLEANOUT
- TWO-WAY SEWER CLEANOUT
- EXISTING WATER VALVE
- PROPOSED WATER VALVE
- PROPOSED STORM DRAIN CATCH BASIN
- D — STORM DRAIN (SIZE PER PLAN)
- SS — SANITARY SEWER (SIZE PER PLAN)
- W — WATER LINE (SIZE PER PLAN)
- G — GAS LINE
- E — ELECTRICAL
- IRR — IRRIGATION LINE
- PROPOSED ASPHALT CONCRETE
- PROPOSED CONCRETE
- PROPOSED SYNTHETIC TURF
- EXISTING BUILDINGS

10' 0' 10' 20'

SCALE: 1" = 10'

(DSA STAMP AREA)

FINNEY ARCHITECTS
2155 SOUTH BASCOM AVE,
SUITE 250
CAMPBELL, CA 95008
PHONE: 408-398-1450

REGISTERED PROFESSIONAL ENGINEER
DAVID W. CRANLEY
NO 70849
CIVIL
STATE OF CALIFORNIA

CLAD

UTILITY PLAN

NEW CLASSROOMS AT
DANA ELEMENTARY SCHOOL
920 W TEFFT STREET, NIPOMO, CALIFORNIA 93444
LUCIA MAR UNIFIED SCHOOL DISTRICT

REVISIONS

NO.	ITEM	DATE
2	ADDENDUM 2	08/19/26

DRAWN BY:	EP
CHECKED BY:	AG, DC
PROJECT NO: 24075	DATE: DSA V3 SUBMITTAL: 05/28/2026

C9

COPYRIGHT © 2024

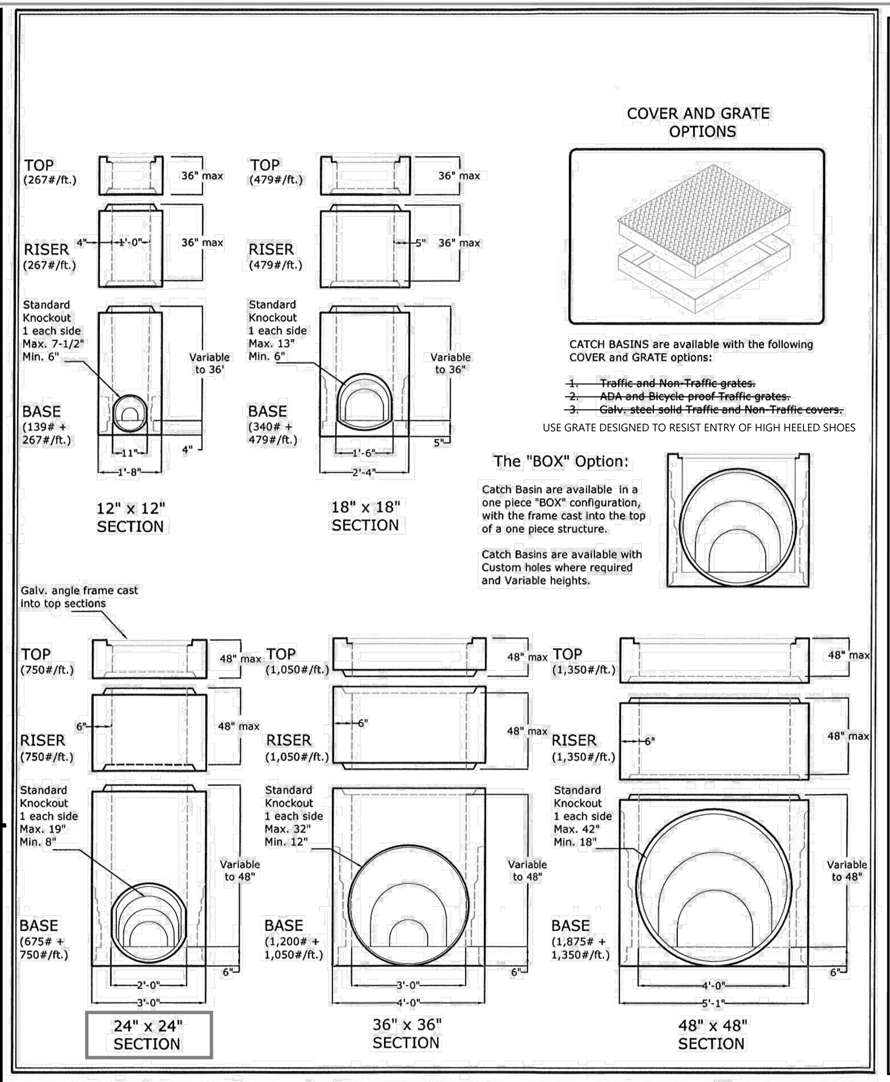

MID STATE Concrete Products Santa Maria, Ca

1625 E. DONOVAN RD., STE. C
SANTA MARIA, CA 93454
PH: (805) 928-2855
FAX: (805) 928-2114
www.midstateconcrete.com

SQUARE CATCH BASINS

REV. 08/08

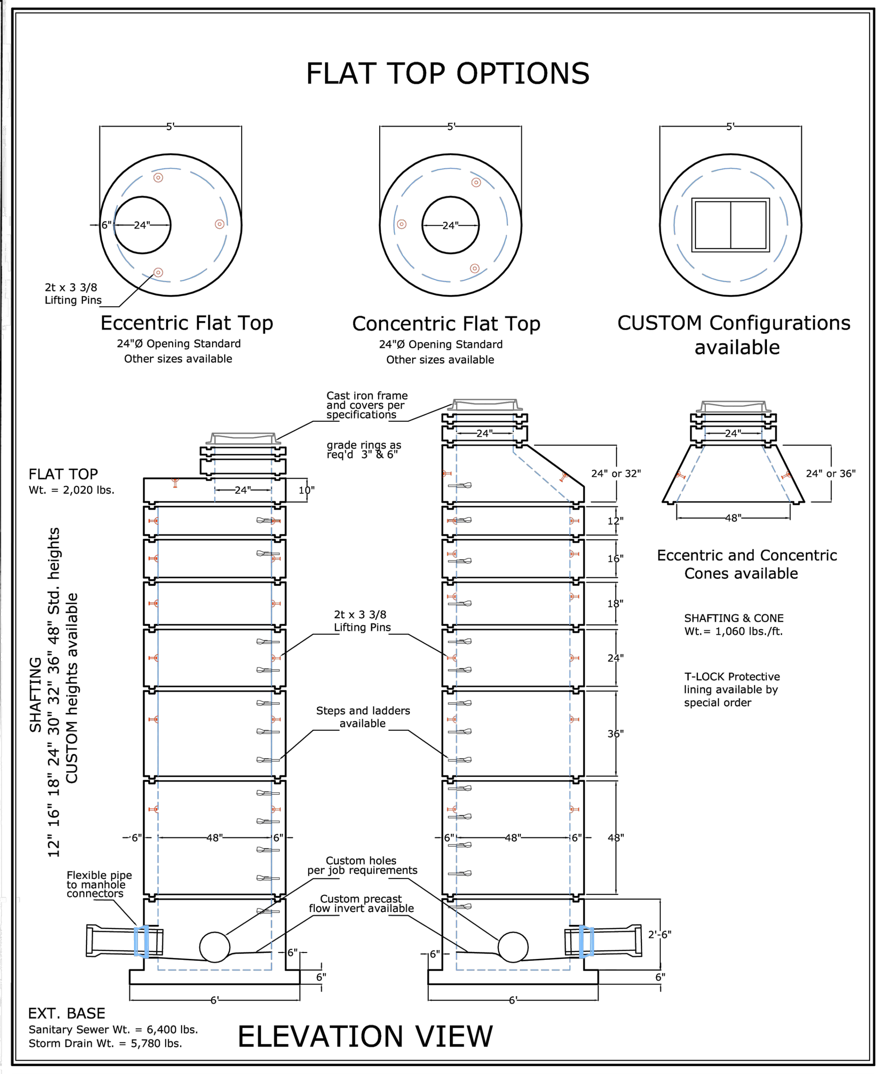

MID STATE Concrete Products Santa Maria, Ca

1625 E. DONOVAN RD., STE. C
SANTA MARIA, CA 93454
PH: (805) 928-2855
FAX: (805) 928-2114
www.midstateconcrete.com

48" DIAMETER MANHOLE

REV. 09/07

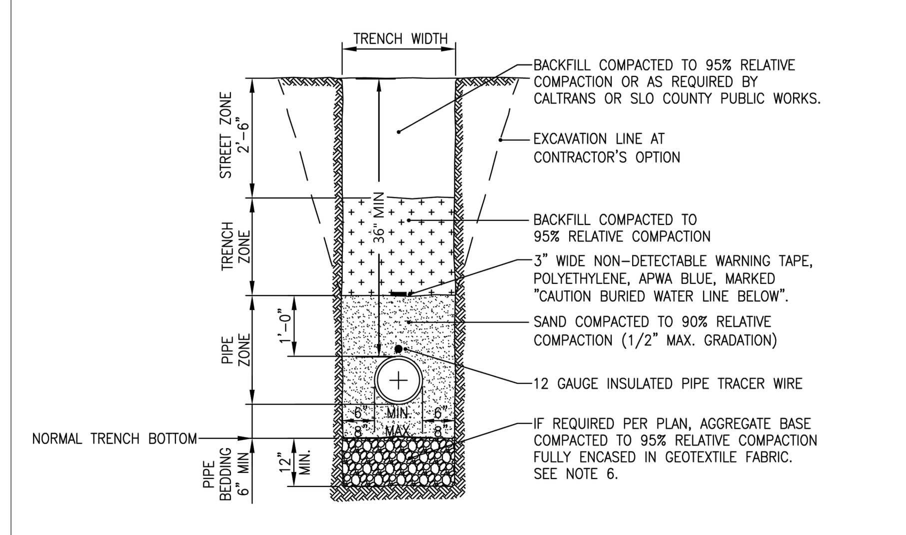

NOTES:

1. SAND SHALL BE PER STANDARD SPECIFICATIONS FOR EARTHWORK.
2. SEE STANDARD SPECIFICATIONS FOR EARTHWORK IF TRENCH WIDTH EXCEEDS THE MAXIMUM SHOWN ON THIS DRAWING.
3. STREET ZONE TO BE COMPACTED TO 95% RELATIVE COMPACTION PER (ASTM D-1557, 5 LAYER). SEE TECHNICAL SPECIFICATIONS FOR EARTHWORK.
4. SEE STREET IMPROVEMENT PLANS (IF APPLICABLE) FOR PAVING REQUIREMENTS.
5. MINIMUM COVER OVER ALL DISTRIBUTION MAINS TO BE 3'-0" AS MEASURED FROM THE FINISHED GRADE.
6. IF REQUIRED DUE TO UNSUITABLE SUBGRADE MATERIAL, PLACE AT LEAST 12" OF NO. 67 CRUSHED AGGREGATE COMPACTED TO 95% RELATIVE COMPACTION FULLY ENCASED IN POLYPROPYLENE, NEEDLE-PUNCHED, NON-WOVEN GEOTEXTILE FABIC, MIRAFI S600, GEOTEX NW-601 OR EQUAL.

DATE	REVISION	NIPOMO COMMUNITY SERVICES DISTRICT		
08/19	REVISE TEXT	WATER PIPE BEDDING AND BACKFILL DETAILS		
05/11	REVISE BACKFILL REQUIREMENTS		DATE DRAWN May 2011	SHEET NO. W-2

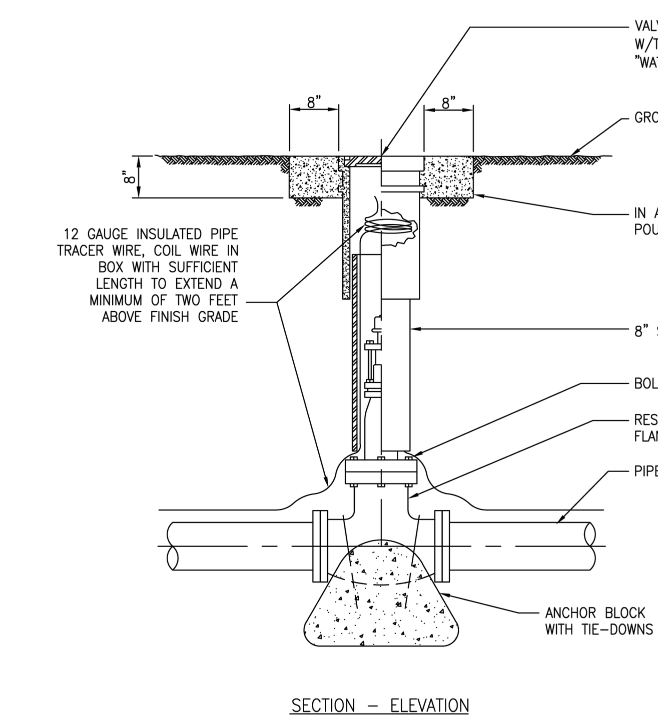

NOTE:
WHEN VALVE BOX IS USED FOR SEWER APPURTENANCE, THE LID SHALL BE MARKED "SEWER".

DATE	REVISION	NIPOMO COMMUNITY SERVICES DISTRICT		
08/19	REVISE TEXT	VALVE BOX ASSEMBLY		
			DATE DRAWN May 2011	SHEET NO. W-3

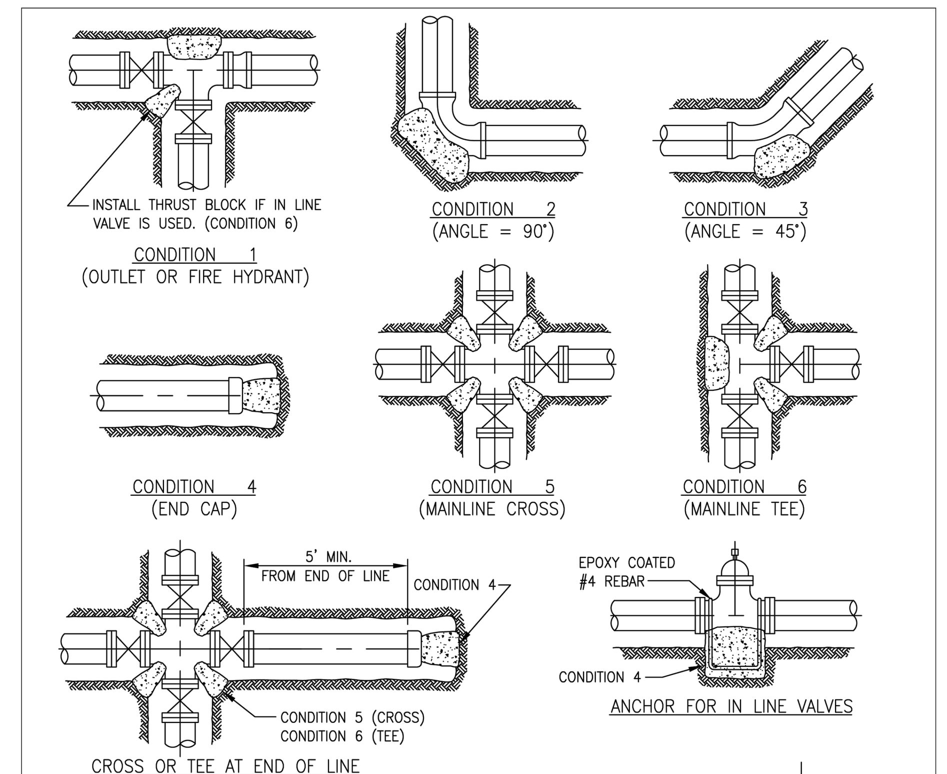

THRUST BLOCK BEARING AREA IN SQ. FT.						
PIPE SIZE	CONDITION 1	2	3	4	5	6
6"	5.0	7.0	4.0	5.0	3.5 EACH	3.5 EACH
8"	8.5	12.0	6.5	8.5	6.0 EACH	6.0 EACH
10"	13.0	18.5	10.0	13.0	9.0 EACH	9.0 EACH
12"	18.5	26.0	14.0	18.5	13.0 EACH	13.0 EACH

BASED ON 1500 P.S.F., 200 P.S.I. TEST PROCEDURE

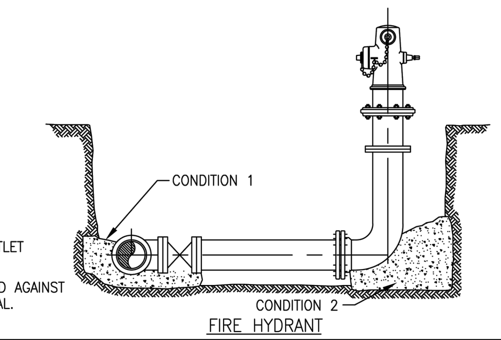

NOTES:
1. SIZE THRUST BLOCK ACCORDING TO THE LARGEST OUTLET DIAMETER ON TEE OR CROSS.
2. ALL THRUST BLOCK BEARING FACES SHALL BE POURED AGAINST UNDISTURBED SOIL OR APPROVED COMPACTED MATERIAL.
3. SEE SPECIFICATIONS FOR CONCRETE REQUIREMENTS.

DATE	REVISION	NIPOMO COMMUNITY SERVICES DISTRICT		
08/19	NO REVISIONS	TYPICAL THRUST BLOCK DETAILS		
			DATE DRAWN MAY 2011	SHEET NO. W-4

(DSA STAMP AREA)

FINNEY ARCHITECTS

2155 SOUTH BASCOM AVE.
SUITE 250
CAMPBELL, CA 95008
PHONE: 408-398-1450

REGISTERED PROFESSIONAL ENGINEER DAVID W. CHANLEY NO 70849 CIVIL STATE OF CALIFORNIA

CLAD

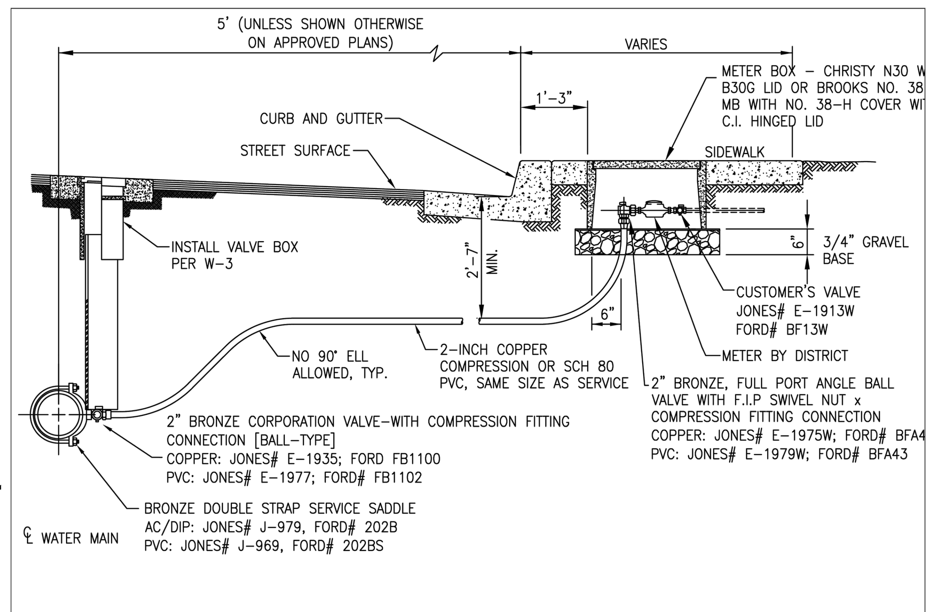

GENERAL NOTES:

1. IF METER BOX IS LOCATED ON A SLOPE NEXT TO A CURB, OR SIDEWALK, A PROTECTIVE RETAINING WALL SHALL BE CONSTRUCTED.
2. CORPORATION VALVE TAP SHALL BE MADE AS SPECIFIED BY THE PIPE MANUFACTURER'S INSTALLATION GUIDE. ALL DRY TAPS SHALL BE MADE WITH MACHINE WITH GUIDE OR PILOT FOR TAP.
3. SIZE OF THE SERVICE MUST BE APPROVED BY THE DISTRICT.
4. THE WATER SERVICE SHALL EXTEND PERPENDICULAR TO THE CENTERLINE OF THE STREET FROM THE WATER MAIN TO THE METER STOP.
5. CORPORATION VALVE TAP SHALL HAVE A SERVICE SADDLE AND SHALL BE MADE AS SPECIFIED BY THE PIPE MANUFACTURER'S INSTALLATION GUIDE. ALL DRY TAPS SHALL BE MADE BY MACHINE WITH GUIDE OR PILOT FOR TAP. (DIRECT TAPS WILL NOT BE ALLOWED)
6. PROVIDE 12 GAUGE INSULATED TRACER WIRE ALONG EACH SERVICE OF SUFFICIENT LENGTH TO EXTEND INTO METER BOX AND A MINIMUM OF 24-INCHES ABOVE FINISH GRADE. COIL NEATLY INSIDE BOX.

DATE	REVISION	NIPOMO COMMUNITY SERVICES DISTRICT		
08/19	REVISE MODEL NUMBERS	1-1/2" & 2" STANDARD WATER SERVICES		
05/11	REVISE MODEL NUMBERS		DATE DRAWN May 2011	SHEET NO. W-9

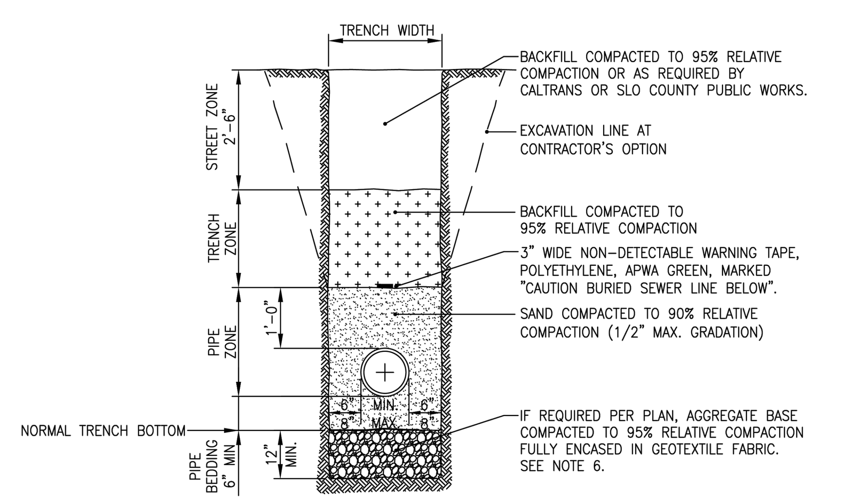

NOTES:

1. SAND SHALL BE PER STANDARD SPECIFICATIONS FOR EARTHWORK.
2. SEE STANDARD SPECIFICATIONS FOR EARTHWORK IF TRENCH WIDTH EXCEEDS THE MAXIMUM SHOWN ON THIS DRAWING.
3. STREET ZONE TO BE COMPACTED TO 95% RELATIVE COMPACTION PER (ASTM D-1557, 5 LAYER). SEE TECHNICAL SPECIFICATIONS FOR EARTHWORK.
4. SEE STREET IMPROVEMENT PLANS (IF APPLICABLE) FOR PAVING REQUIREMENTS.
5. MINIMUM COVER OVER ALL SEWER MAINS TO BE 6'-0" AS MEASURED FROM THE FINISHED GRADE.
6. IF REQUIRED DUE TO UNSUITABLE SUBGRADE MATERIAL, PLACE AT LEAST 12" OF NO. 67 CRUSHED AGGREGATE COMPACTED TO 95% RELATIVE COMPACTION FULLY ENCASED IN POLYPROPYLENE, NEEDLE-PUNCHED, NON-WOVEN GEOTEXTILE FABRIC, MIRAFI S600, GEOTEX NW-601 OR EQUAL.

DATE	REVISION	NIPOMO COMMUNITY SERVICES DISTRICT		
08/19	NO REVISIONS	SEWER PIPE BEDDING AND BACKFILL DETAILS		
05/11	REVISE BACKFILL REQUIREMENTS		DATE DRAWN MAY 2011	SHEET NO. S-2

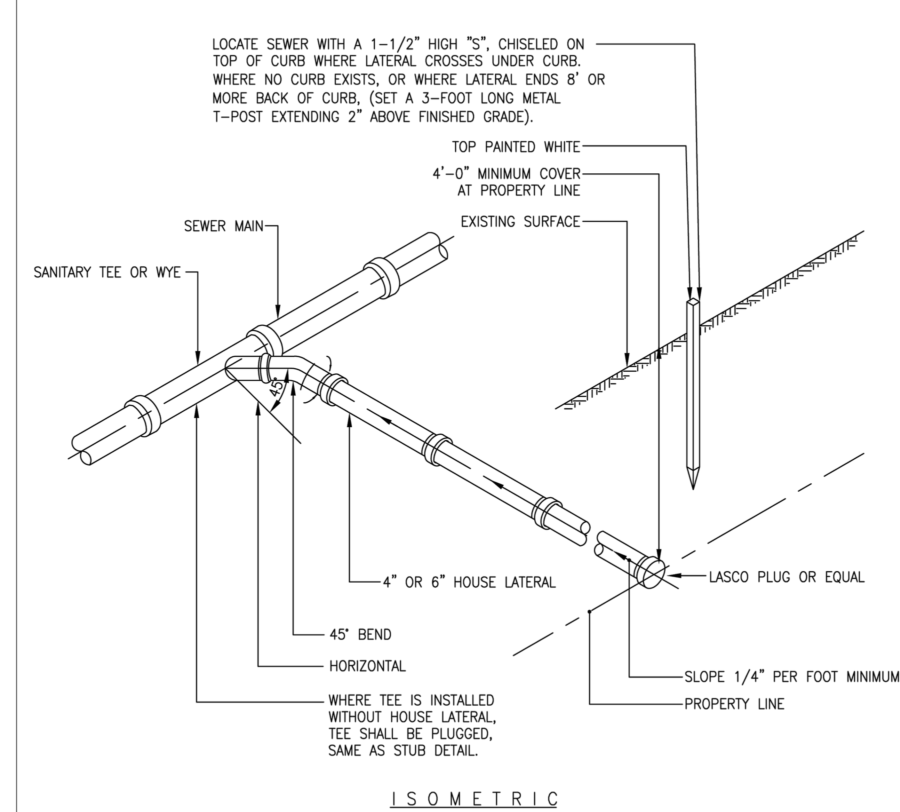

DATE	REVISION	NIPOMO COMMUNITY SERVICES DISTRICT		
08/19	REMOVED TRACER WIRE	TYPICAL SEWER LATERAL		
			DATE DRAWN MAY 2011	SHEET NO. S-6

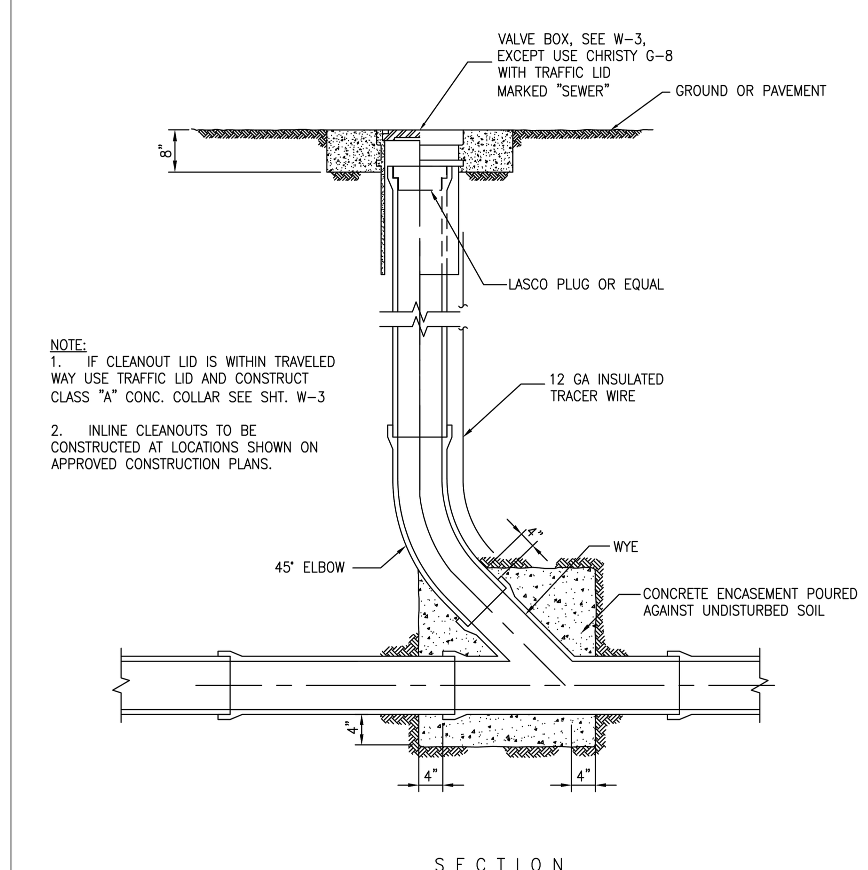

NOTE:
1. IF CLEANOUT LID IS WITHIN TRAVELED WAY USE TRAFFIC LID AND CONSTRUCT CLASS "A" CONC. COLLAR SEE SHT. W-3
2. INLINE CLEANOUTS TO BE CONSTRUCTED AT LOCATIONS SHOWN ON APPROVED CONSTRUCTION PLANS.

DATE	REVISION	NIPOMO COMMUNITY SERVICES DISTRICT		
08/19	NO REVISIONS	INLINE CLEANOUT		
			DATE DRAWN MAY 2011	SHEET NO. S-8

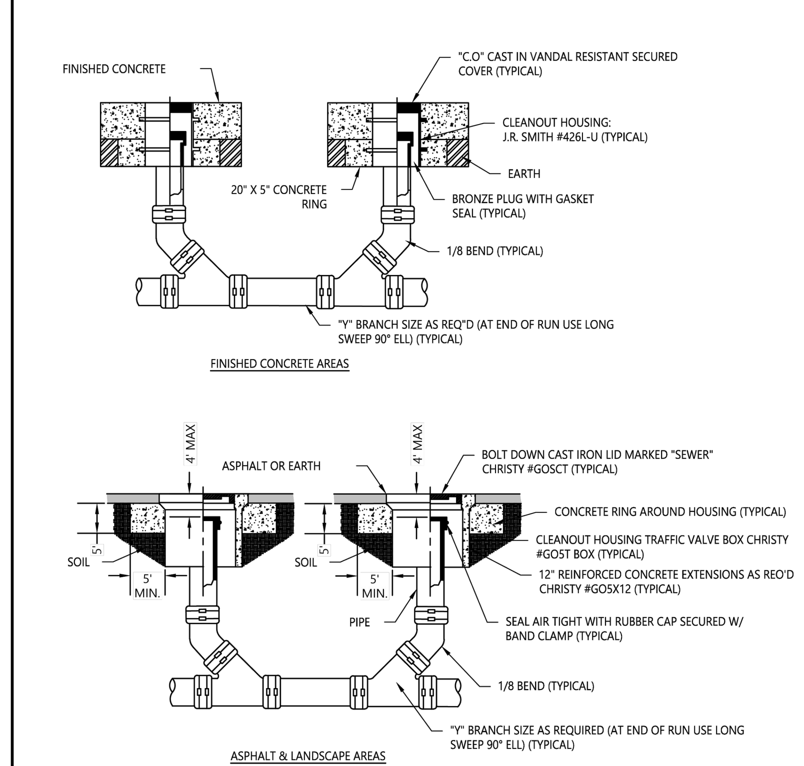

2 **2-WAY CLEANOUT**
Scale: NTS

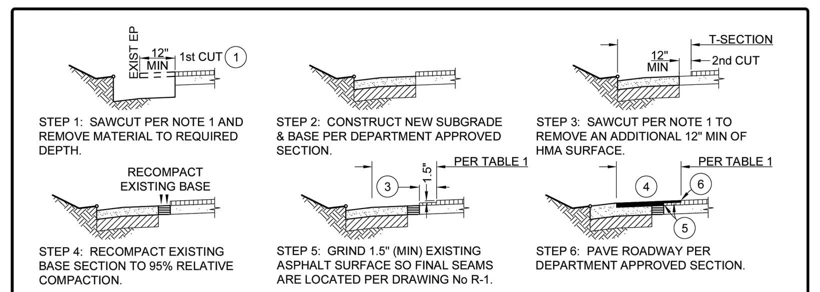

Table 1: Minimum Pavement Width Repair Limits (see R-1)

PCI	Roadways with 500 ADT or less and within the URL	All Other Roadways
85-100	Full Lane Width Overlay	Full Lane Width Overlay
65-84	12" min. T-Section	Half Lane Width Overlay
<65	12" min. T-Section	12" min. T-Section

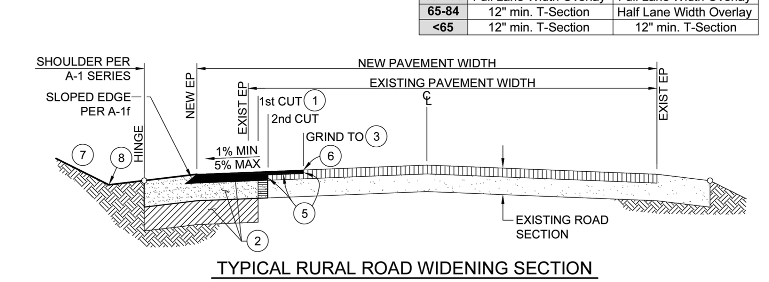

NOTES:
1. SAWCUT TO REMOVE DAMAGED OR FAILED PAVEMENT SECTION ADJACENT TO THE EDGE OF PAVEMENT AS NECESSARY TO PROVIDE A CLEAN JOIN LINE. ALL SAWCUTS SHALL BE PERPENDICULAR OR TRANSVERSE TO THE TRAVEL LANE. CUT EDGES SHALL BE VERTICAL WITH SQUARE CORNERS AND SHALL BE STRAIGHT AND NEAT IN APPEARANCE.
2. THE STRUCTURAL ROAD WIDENING SECTION SHALL BE DETERMINED AT THE TIME OF CONSTRUCTION BASED ON THE SUBGRADE R-VALUE AND THE TRAFFIC INDEX (TI) AS PROVIDED BY THE DEPARTMENT. IF THE EXISTING ROAD STRUCTURAL SECTION IS GREATER THAN THE DETERMINED ROAD STRUCTURAL SECTION, THEN THE EXISTING STRUCTURAL SECTION THICKNESS SHALL BE MATCHED. TYPICAL ROAD WIDENING SECTION SHALL BE:
   - HOT MIX ASPHALT (HMA) PER THE DESIGN STANDARDS TO 95% RELATIVE COMPACTION, OVER
   - CLASS II AGGREGATE BASE TO 95% RELATIVE COMPACTION, OVER
   - 12" MINIMUM SUBGRADE TO 95% RELATIVE COMPACTION
3. GRIND 1.5-INCHES (MINIMUM) FROM THE EXISTING ADJACENT HMA PAVEMENT SO THAT FINAL HMA SEAMS ARE LOCATED IN ACCORDANCE WITH TABLE 1 & DRAWING R-1, OR AS DIRECTED BY THE DEPARTMENT.
4. NEW PAVEMENT SHALL BE PLACED IN LIFTS NOT EXCEEDING 3-INCHES (COMPACTED), WITH A MINIMUM LIFT NOT LESS THAN 1.5-INCHES.
5. A TACK COAT SHALL BE APPLIED TO ALL HORIZONTAL AND VERTICAL CONFORM SURFACES PRIOR TO PAVING.
6. AFTER PAVING, APPLY SS1H OIL (OR APPROVED EQUAL) TO ALL HMA SURFACE SEAMS PER MANUFACTURER'S RECOMMENDATIONS.
7. CUT AND FILL SLOPES BEYOND ROADWAY HINGE POINTS SHALL NOT EXCEED 2 HORIZONTAL:1 VERTICAL (OR 3h:1v IN NATIVE SAND) WITHOUT PRIOR APPROVAL BY THE DEPARTMENT.
8. THE PROJECT ENGINEER SHALL ACCOMMODATE FOR ROADSIDE DRAINAGE SUCH THAT IT DOES NOT ERODE THE AGGREGATE SHOULDER. DESIGN AND CONSTRUCTION SHALL BE TO THE SATISFACTION OF THE DEPARTMENT.
9. ROAD SECTIONS WITH HMA DIKE (REFER TO DRAWING No C-3) SHALL BE REQUIRED BY THE DEPARTMENT WHERE NEEDED TO CONTROL DRAINAGE OR EROSION AND ON LONGITUDINAL GRADES OF 3-PERCENT OR GREATER.

DEPARTMENT OF PUBLIC WORKS - STANDARD DRAWINGS	Issued: August 2022	Scale: NTS
PAVEMENT RESTORATION	Revised:	Revision No:
RURAL ROAD WIDENING	Drawing No:	R-2

COPYRIGHT © 2024

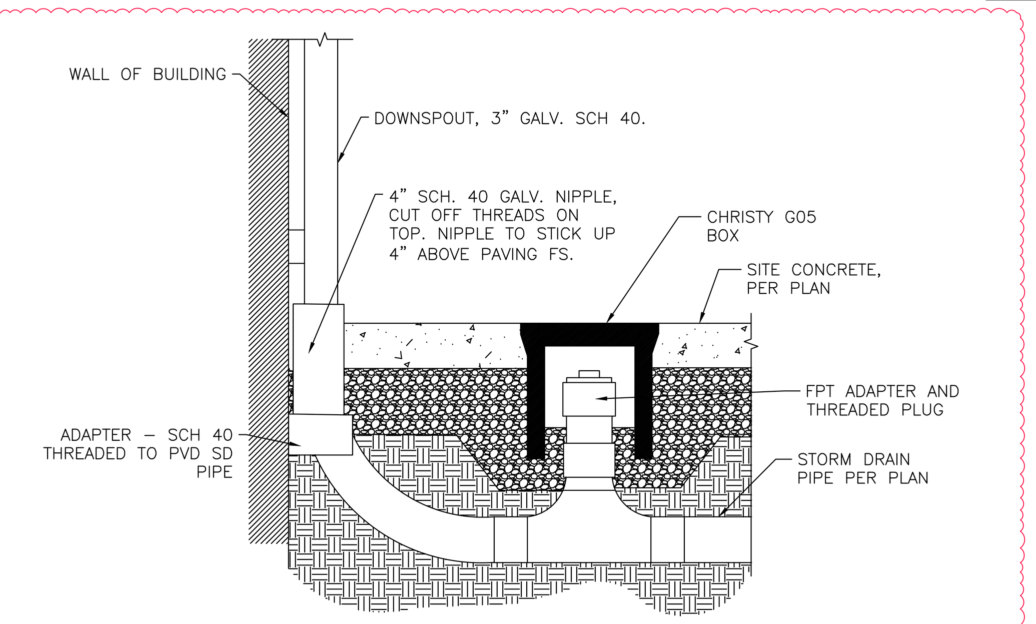

1 **DOWNSPOUT CONNECTION TO STORM DRAIN**
Scale: NTS

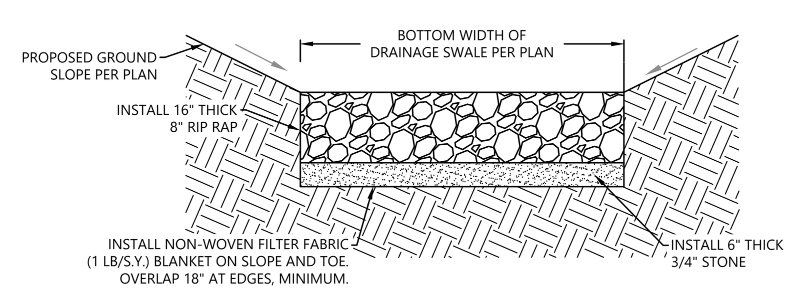

3 **RIP-RAP**
Scale: NTS

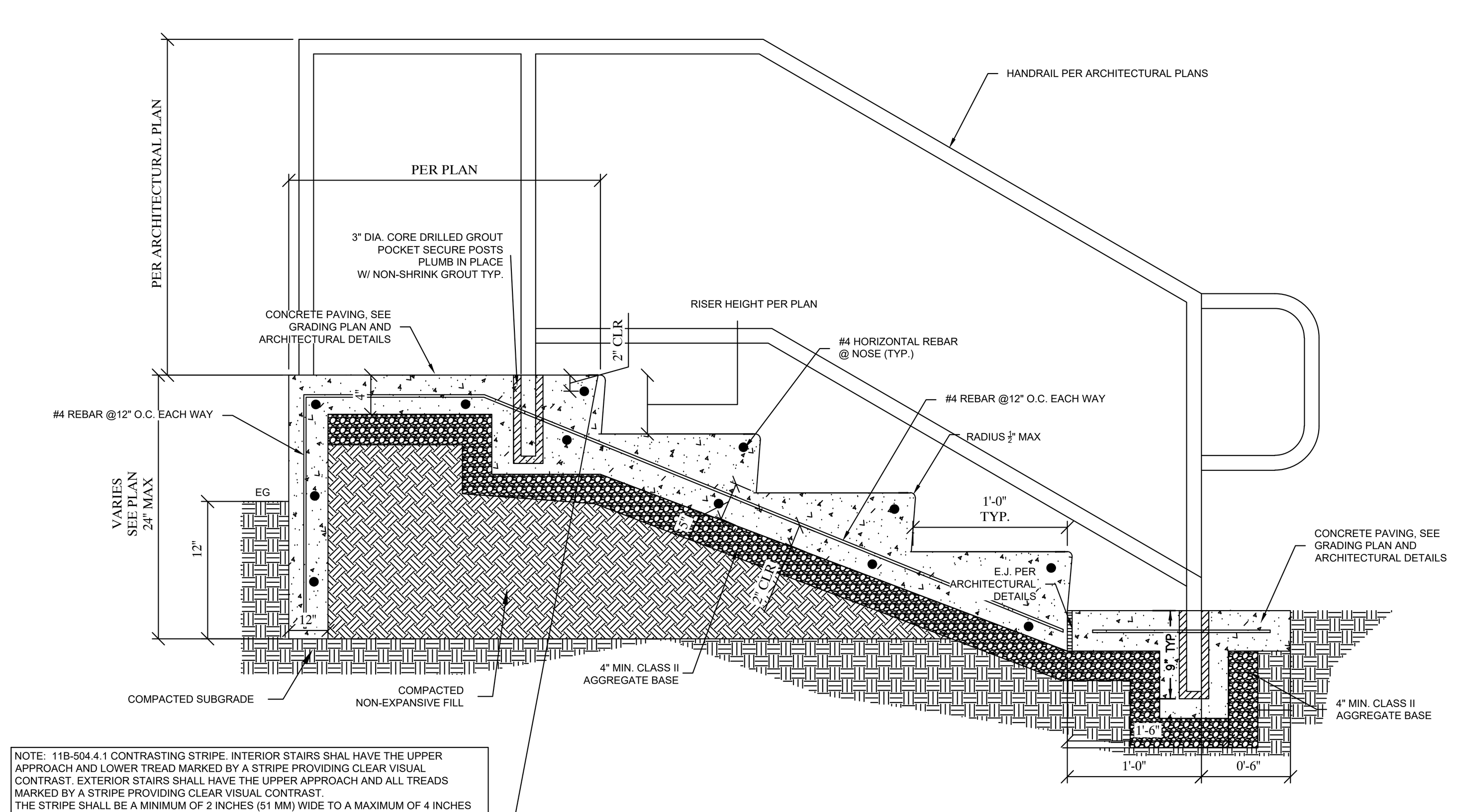

NOTE: 11B-504.4.1 CONTRASTING STRIPE. INTERIOR STAIRS SHAL HAVE THE UPPER APPROACH AND LOWER TREAD MARKED BY A STRIPE PROVIDING CLEAR VISUAL CONTRAST. EXTERIOR STAIRS SHALL HAVE THE UPPER APPROACH AND ALL TREADS MARKED BY A STRIPE PROVIDING CLEAR VISUAL CONTRAST.
THE STRIPE SHALL BE A MINIMUM OF 2 INCHES (51 MM) WIDE TO A MAXIMUM OF 4 INCHES (102 MM) WIDE, PLACED PARALLEL, TO AND NOT MORE THAN 1 INCH (25 MM) FROM THE NOSE OF THE STEP OR UPPER APPROACH. THE STRIPE SHALL EXTEND THE FULL WIDTH OF THE STEP OR UPPER APPROACH AND SHALL BE OF MATERIAL THAT IS AT LEAST AS SLIP RESISTANT AS THE OTHER TREADS OF THE STAIR. A PAINTED STRIPE SHALL BE ACCEPTABLE. GROOVES SHALL NOT BE USED TO SATISFY THIS REQUIREMENT.

4 **PROPOSED CONCRETE STEPS**
Scale: NTS

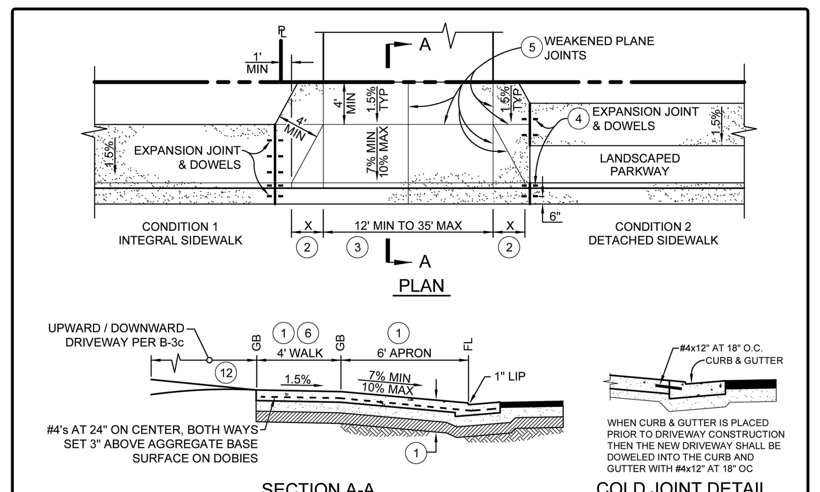

NOTES:
1. CONCRETE DRIVEWAY SHALL CONFORM TO STATE STANDARD SPECIFICATIONS, 520 LBS/CY CEMENTITIOUS MATERIAL [5-1/2 SACK]. CONCRETE CURING SHALL BE BY PIGMENTED CURING COMPOUND METHOD USING WHITE PIGMENT TYPE. TYPICAL SECTION SHALL BE:
   - 8-INCH MINIMUM PORTLAND CEMENT CONCRETE REINFORCED WITH #4's AT 24" OC BOTH WAYS, OVER
   - 6" MIN CLASS II AGGREGATE BASE TO 95% RELATIVE COMPACTION, OVER
   - 12" MINIMUM SUBGRADE TO 95% RELATIVE COMPACTION

   IF THE R-VALUE OF THE NATIVE MATERIAL IS 55 OR GREATER THEN THE 6-INCHES OF AGGREGATE BASE MAY BE SUBSTITUTED WITH COMPACTED NATIVE MATERIAL.
   A COURSE BROOM FINISH TRANSVERSE TO THE LINE OF TRAFFIC SHALL BE USED ON THE APRON AND WINGS. THE 4-FEET WIDE SIDEWALK SHALL HAVE A LIGHT BROOM FINISH PARALLEL TO THE LINE OF TRAFFIC.
2. X = 3-FEET (6h:1v) EXCEPT FOR CURB HEIGHTS OVER 8-INCHES WHERE 4h:1v SLOPES SHALL BE USED ON CURB SLOPE.
3. W = DRIVEWAY WIDTH SHALL BE 12-FEET MINIMUM AND 35-FEET MAXIMUM FOR COMMERCIAL-INDUSTRIAL ACCESS.
4. EXPANSION JOINTS (EJ) SHALL BE CONSTRUCTED AS SHOWN. 1/2"Øx18" SMOOTH, GREASED DOWELS SHALL BE PLACED IN THE EJ, ONE IN CURB FACE, ONE IN GUTTER, AND AT 18-INCHES ON CENTER IN SIDEWALKS PER STANDARD DRAWING C-1.
5. WEAKENED PLANE JOINTS (WPJ) SHALL BE CONSTRUCTED AS SHOWN AND PER STANDARD DRAWING C-1.
6. THE CROSS SLOPE OF THE 4-FEET WIDE SIDEWALK SHALL BE 1.5% (3/16-INCH PER FOOT), BUT NOT EXCEED 2% (1/4-INCH PER FOOT). MINIMUM SIDEWALK WIDTH FOR CLEAR PASSAGE SHALL BE MAINTAINED (NO OBSTACLES LOCATED WITHIN).
7. WHERE THE IMPROVEMENTS EXTEND BEYOND THE RIGHT-OF-WAY, THE ACQUISITION OF PEDESTRIAN EASEMENTS SHALL BE REQUIRED BY THE DEPARTMENT.
8. REFER TO A-5 SERIES DRAWINGS FOR DRIVEWAY SIGHT DISTANCE REQUIREMENTS.
9. FOR NEW DRIVEWAY CONSTRUCTION AGAINST EXISTING ROADWAY, SAWCUT TO REMOVE EXISTING ROADWAY AND RECONSTRUCT PER DRAWINGS R-1 AND R-3.
10. THE HIGH VOLUME DRIVEWAY STANDARD B-3b SHALL BE USED AT ENTRANCES THAT EXCEED 200 VEHICLES PER PM PEAK HOUR AND EXIT ONTO AN ARTERIAL ROAD. THE DEPARTMENT RESERVES THE RIGHT TO REQUIRE THE USE OF A HIGH VOLUME DRIVEWAY BASED ON OTHER EXTENUATING CONDITIONS.
11. UNDER NO CIRCUMSTANCES SHALL UTILITY LIDS AND CONCRETE COLLARS BE LOCATED WITHIN DRIVEWAY APRONS.
12. OUTSIDE THE PUBLIC RIGHT-OF-WAY, THE DRIVEWAY STRUCTURAL SECTION SHALL BE DETERMINED BY THE PROJECT DESIGNER AND SHALL BE IN COMPLIANCE WITH CDF/FIRE REGULATIONS.

DEPARTMENT OF PUBLIC WORKS - STANDARD DRAWINGS	Issued: August 2022	Scale: 1"=10'
COMMERCIAL DRIVEWAY	Revised:	Revision No:
TYPICAL DRIVEWAY	Drawing No:	B-3a

DETAIL SHEET

NEW CLASSROOMS AT
DANA ELEMENTARY SCHOOL
920 W TEFFT STREET, NIPOMO, CALIFORNIA 93444
LUCIA MAR UNIFIED SCHOOL DISTRICT

REVISIONS

NO.	ITEM	DATE
2	ADDENDUM 2	08/19/26

DRAWN BY: EP
CHECKED BY: AG, DC
PROJECT NO: 24075
DATE: DSA V3 SUBMITTAL: 05/28/2026

C11

NEW CLASSROOMS AT DANA ELEMENTARY SCHOOL

920 W TEFFT STREET, NIPOMO, CALIFORNIA 93444

LUCIA MAR UNIFIED SCHOOL DISTRICT

DSA FILE NUMBER 40-39
DSA APPLICATION NUMBER 03-125585
OPSC 68759-135

GENERAL NOTES

PRE-BID SITE VISIT

CONTRACTOR SHALL VISIT THE PROJECT AREA IN ORDER TO BECOME FAMILIAR WITH EXISTING CONDITIONS AND THE REQUIREMENTS OF THE PROJECT. THE CONTRACTOR MAY CONTACT THE ARCHITECT DURING THE BIDDING PHASE REGARDING CLARIFICATIONS AND PROJECT REQUIREMENTS.

SAFETY

IN ACCORDANCE WITH GENERALLY ACCEPTED CONSTRUCTION PRACTICES, THE CONTRACTOR WILL BE SOLELY AND COMPLETELY RESPONSIBLE FOR CONDITIONS OF THE JOB SITE INCLUDING SAFETY OF ALL PERSONS AND PROPERTY DURING PERFORMANCE OF THE WORK. THIS REQUIREMENT WILL APPLY CONTINUOUSLY AND NOT BE LIMITED TO NORMAL WORKING HOURS.

DAMAGE TO STRUCTURE OR SYSTEMS TO REMAIN

CONTRACTOR SHALL REIMBURSE THE OWNER FOR REPAIR AND REPLACEMENT, INCLUDING ARCHITECT'S FEES, FOR ANY DAMAGE CAUSED TO STRUCTURES, LANDSCAPE, SITE WORK, OR EXISTING SYSTEMS TO REMAIN, AS THE RESULT OF CONSTRUCTION OPERATIONS.

EXISTING CONDITIONS

ALL EXISTING CONDITIONS ARE SHOWN BASED ON THE BEST INFORMATION AVAILABLE AT THE TIME, BUT WITHOUT GUARANTEE OF ACCURACY. THE CONTRACTOR SHALL FIELD VERIFY ALL EXISTING CONDITIONS, DIMENSIONS, AND BUILDING DATA AT THE JOB SITE. ANY DISCREPANCIES REQUIRING MODIFICATION TO THE CONSTRUCTION DOCUMENTS SHALL BE REPORTED TO THE ARCHITECT IMMEDIATELY. NO MODIFICATIONS SHALL BE MADE BY THE CONTRACTOR WITHOUT PRIOR APPROVAL FROM THE ARCHITECT.

CONTRACTOR'S EQUIPMENT

COORDINATE WITH OWNER'S REPRESENTATIVE FOR APPROVED LOCATION OF JOB SITE ACCESS, PARKING, AND LOCATION OF CONTRACTOR'S EQUIPMENT AND MATERIAL STORAGE AREA. SEE SITE PLAN FOR ADDITIONAL NOTES.

UTILITY SHUT-DOWNS AND CONNECTIONS

ALL REQUIRED UTILITY SHUT DOWNS SHALL HAVE PRIOR APPROVAL FROM THE OWNER'S REPRESENTATIVE. REQUEST SHALL BE SUBMITTED WITH ADEQUATE ADVANCE NOTICE PER PROJECT REQUIREMENTS.

ALL BUILDING MATERIALS MUST BE ASBESTOS FREE.

THESE DOCUMENTS DO NOT ADDRESS CONTAINMENT FOR EXISTING AREAS OF ASBESTOS WHICH MAY BE DISCOVERED DURING CONSTRUCTION. THE OWNER'S ABATEMENT SUBCONTRACTOR IS SOLELY RESPONSIBLE FOR THE DETECTION, REMOVAL, AND THE DISPOSAL OF ANY EXISTING ASBESTOS MATERIAL. ARCHITECTURAL AND ENGINEERING FEES FOR ADDITIONAL DESIGN EFFORT TO OBTAIN STATE APPROVALS, AS WELL AS THE COST OF ANY REPAIRS, FOR DAMAGE CAUSED OR REPLACEMENT OF EXISTING SYSTEMS TO REMAIN, DUE TO WORK PERFORMED BY THE ASBESTOS ABATEMENT SUBCONTRACTOR, SHALL BE THE RESPONSIBILITY OF SAID SUBCONTRACTOR.

CONSTRUCTION SCHEDULING

CONTRACTOR SHALL COORDINATE ALL CONSTRUCTION OPERATIONS WITH OWNER'S REPRESENTATIVE PRIOR TO SCHEDULING AND START OF THE WORK. CONTRACTOR SHALL PROVIDE PROTECTION TO ALL EXISTING SPACES AND SYSTEMS WHICH ARE IN USE, ADJOINING THE PROJECT, AND NOT PART OF THE PROJECT.

INTERIOR FINISHES

INTERIOR FINISHES AND ALL WALL COVERING MATERIAL SHALL CONFORM TO CCR TITLE 24, PART 2, CHAPTER 8.

TITLE 24 COMPLIANCE

THE INTENT OF THESE DRAWINGS AND SPECIFICATIONS IS THAT THE WORK OF THE ALTERATION, REHABILITATION OR RECONSTRUCTION IS TO BE IN ACCORDANCE WITH TITLE 24, CCR. SHOULD ANY EXISTING CONDITIONS SUCH AS DETERIORATION OR NON-COMPLYING CONSTRUCTION BE DISCOVERED WHICH IS NOT COVERED BY THE CONTRACT DOCUMENTS WHEREIN THE FINISHED WORK WILL NOT COMPLY WITH TITLE 24, CCR, A CONSTRUCTION CHANGE DOCUMENT (CCD), OR A SEPARATE SET OF PLANS AND SPECIFICATIONS, DETAILING AND SPECIFYING THE REQUIRED WORK SHALL BE SUBMITTED TO AND APPROVED BY DSA BEFORE PROCEEDING WITH THE WORK. (SECTION 4-317(C), PART 1, TITLE 24, CCR).

ADMINISTRATIVE REQUIREMENTS FROM PART 1., TITLE 24, C.C.R.

- CHANGES TO THE APPROVED DRAWINGS AND SPECIFICATIONS SHALL BE MADE BY AN ADDENDUM OR A CONSTRUCTION CHANGE DOCUMENT, AND APPROVED BY DSA, AS PER SECTION 4-338.
- A DSA CERTIFIED PROJECT INSPECTOR EMPLOYED BY THE DISTRICT AND APPROVED BY DSA SHALL PROVIDE CONTINUOUS INSPECTION OF WORK, PER SECTION 4-342.
- A DSA ACCEPTED TESTING LABORATORY DIRECTLY EMPLOYED BY THE DISTRICT SHALL CONDUCT ALL REQUIRED TEST AND INSPECTIONS FOR THE PROJECT.
- SPECIAL INSPECTION PER SECTION 4-333 (C)
- CONTRACTOR SHALL SUBMIT VERIFIED REPORT OR SECTION 4-336 & 4-343 (C)
- ADMINISTRATION OR CONSTRUCTION PER PART 1, TITLE 24, C.C.R.
- DUTIES OF ARCHITECT, STRUCTURAL ENGINEER, OR PROFESSIONAL ENGINEER PER SECTION 4-333 (A) AND 4-341
- DUTIES OF CONTRACTOR PER SECTION 4-343
- VERIFIED REPORTS PER SECTION 4-343 AND 4-336
- A COPY OF ALL APPLICABLE PARTS REFERRED TO BY THE PLANS AND SPECIFICATIONS OF TITLE 24 SHALL BE KEPT AND AVAILABLE IN THE FIELD DURING CONSTRUCTION
- DSA SHALL BE NOTIFIED AT START OF CONSTRUCTION AND PRIOR TO PLACEMENT OF CONCRETE PER SECTION 4-331
- SUPERVISION BY DSA PER SECTION 4-334
- DSA IS NOT SUBJECT TO ARBITRATION

ADMINISTRATIVE REQUIREMENTS

- ADDENDA MUST BE SIGNED BY ARCHITECT AND APPROVED BY DSA
- NO CHANGES OR REVISIONS SHALL BE MADE FOLLOWING WRITTEN APPROVAL WHICH AFFECTS ACCESS COMPLIANCE ITEM UNLESS SUCH CHANGES TO REVISIONS ARE SUBMITTED TO DSA FOR APPROVAL.
- SUBSTITUTIONS AFFECTING DSA REGULATED ITEMS SHALL BE SUBMITTED AS A CONSTRUCTION CHANGE DOCUMENT OR ADDENDA, AND SHALL BE APPROVED BY DSA PRIOR TO FABRICATION AND INSTALLATION
- CONSTRUCTION CHANGE DOCUMENTS MUST BE SIGNED BY THE FOLLOWING:
  -- ARCHITECT OR ENGINEER OF RECORD
  -- STRUCTURAL ENGINEER (WHEN APPLICABLE)
  -- DELEGATED PROFESSIONAL ENGINEER
  -- DSA
- MATERIALS AND THEIR INSTALLATIONS SHALL COMPLY WITH APPLICABLE CODES.
- PER CBC 11B-104.1 "ALL DIMENSIONS ARE SUBJECT TO CONVENTIONAL INDUSTRY TOLERANCES EXCEPT WHERE THE REQUIREMENT IS STATED AS A RANGE WITH SPECIFIC MINIMUM AND MAXIMUM END POINTS.

CALIFORNIA ENERGY CODE

THE CALIFORNIA ENERGY CODE SECTION 10-103 REQUIRES ACCEPTANCE TESTING ON ALL NEWLY INSTALLED LIGHTING CONTROLS, MECHANICAL SYSTEMS, ENVELOPES, AND PROCESS EQUIPMENT AFTER INSTALLATION AND BEFORE PROJECT COMPLETION. AN ACCEPTANCE TEST IS A FUNCTIONAL PERFORMANCE TEST TO HELP ENSURE THAT NEWLY INSTALLED EQUIPMENT IS OPERATING AND IN COMPLIANCE WITH THE ENERGY CODE.

LIGHTING CONTROLS ACCEPTANCE TEST MUST BE PERFORMED BY A CERTIFIED LIGHTING CONTROLS ACCEPTANCE TEST TECHNICIAN (ATT).

MECHANICAL SYSTEM ACCEPTANCE TESTS MUST BE PERFORMED BY A CERTIFIED MECHANICAL ATT.

A LISTING OF CERTIFIED ATT's CAN BE FOUND AT
https://www.energy.ca.gov/programs-and-topics/programs/acceptance-test-technician-certification-provider-program/acceptance

THE ACCEPTANCE TESTING PROCEDURES MUST BE REPEATED, AND DEFICIENCIES MUST BE CORRECTED BY THE BUILDER OR INSTALLING CONTRACTOR UNTIL THE CONSTRUCTION/INSTALLATION OF THE SPECIFIED SYSTEMS CONFORM AND PASS THE REQUIRED ACCEPTANCE CRITERIA.

PROJECT INSPECTORS WILL BE COLLECTING THE FORMS TO CONFIRM THAT THE REQUIRED ACCEPTANCE TESTS HAVE BEEN COMPLETED.

DSA APPROVAL OF THESE PLANS SHALL NOT BE CONSTRUED AS THE CERTIFICATION OF COMPLIANCE FOR THE PROJECT BUILDINGS AS REQUIRED BY THE FIELD ACT, EDUCATION CODE SECTIONS 17280-17316 AND SECTIONS 81130-81147

COMPLIANCE WITH LOCAL ORDINANCES

GRADING PLANS, DRAINAGE IMPROVEMENTS, ROAD AND ACCESS REQUIREMENTS AND ENVIRONMENTAL HEALTH CONSIDERATIONS SHALL COMPLY WITH ALL LOCAL ORDINANCES.

COPYRIGHT ©2024

GENERAL NOTES, cont.

CALIFORNIA ENERGY CODE

THE CALIFORNIA ENERGY CODE SECTION 10-103 REQUIRES ACCEPTANCE TESTING ON ALL NEWLY INSTALLED LIGHTING CONTROLS, MECHANICAL SYSTEMS, ENVELOPES, AND PROCESS EQUIPMENT AFTER INSTALLATION AND BEFORE PROJECT COMPLETION. AN ACCEPTANCE TEST IS A FUNCTIONAL PERFORMANCE TEST TO HELP ENSURE THAT NEWLY INSTALLED EQUIPMENT IS OPERATING AND IN COMPLIANCE WITH THE ENERGY CODE.

LIGHTING CONTROLS ACCEPTANCE TEST MUST BE PERFORMED BY A CERTIFIED LIGHTING CONTROLS ACCEPTANCE TEST TECHNICIAN (ATT).

MECHANICAL SYSTEM ACCEPTANCE TESTS MUST BE PERFORMED BY A CERTIFIED MECHANICAL ATT.

A LISTING OF CERTIFIED ATT's CAN BE FOUND AT
https://www.energy.ca.gov/programs-and-topics/programs/acceptance-test-technician-certification-provider-program/acceptance

THE ACCEPTANCE TESTING PROCEDURES MUST BE REPEATED, AND DEFICIENCIES MUST BE CORRECTED BY THE BUILDER OR INSTALLING CONTRACTOR UNTIL THE CONSTRUCTION/INSTALLATION OF THE SPECIFIED SYSTEMS CONFORM AND PASS THE REQUIRED ACCEPTANCE CRITERIA.

PROJECT INSPECTORS WILL BE COLLECTING THE FORMS TO CONFIRM THAT THE REQUIRED ACCEPTANCE TESTS HAVE BEEN COMPLETED.

DSA APPROVAL OF THESE PLANS SHALL NOT BE CONSTRUED AS THE CERTIFICATION OF COMPLIANCE FOR THE PROJECT BUILDINGS AS REQUIRED BY THE FIELD ACT, EDUCATION CODE SECTIONS 17280-17316 AND SECTIONS 81130-81147

COMPLIANCE WITH LOCAL ORDINANCES

GRADING PLANS, DRAINAGE IMPROVEMENTS, ROAD AND ACCESS REQUIREMENTS AND ENVIRONMENTAL HEALTH CONSIDERATIONS SHALL COMPLY WITH ALL LOCAL ORDINANCES.

ABBREVIATIONS

(REFER TO CONSULTANT DRAWINGS FOR ADDITIONAL ABBREVIATIONS)

A.F.F.	ABOVE FINISHED FLOOR
A.P.	ACCESS PANEL
ACT	ACOUSTIC TILE
ADJ.	ADJUSTABLE
ALUM.	ALUMINUM
A.B.	ANCHOR BOLT
APPROX.	APPROXIMATELY
ARCH.	ARCHITECT
AC	ASPHALTIC CONCRETE
@	AT
B.M.	BENCH MARK
BLKG.	BLOCKING
BD.	BOARD
B.W.	BOTH WAYS
BOT.	BOTTOM
BLDG.	BUILDING
B.U.R.	BUILT-UP ROOFING
C.B.	CATCH BASIN
CLG.	CEILING
CEM.	CEMENT
C.C or O.C.	CENTER TO CENTER
	CENTERLINE
CER. TILE	CERAMIC TILE
C.O.	CLEANOUT
C.O.T.G.	CLEANOUT TO GRADE
CLR.	CLEAR
C.A.H.R.	CLEAR ALL HEART REDWOOD
C.W.	COLD WATER
COL.	COLUMN
COM.	COMMON
CONC.	CONCRETE
CONST.	CONSTRUCTION
C.H.	CONSTRUCTION HEART
C.J.	CONSTRUCTION JOINT
CONT.	CONTINUOUS
CONTR.	CONTRACTOR
CTR.	COUNTER
CTSK.	COUNTER SUNK
DET.	DETAIL
DIA. or Ø	DIAMETER
DIM.	DIMENSION
D.A.	DISABLED ACCESS
DR.	DOOR
D.S.	DOWNSPOUT
DWG.	DRAWING
D.F.	DRINKING FOUNTAIN and/or DOUGLAS FIR
EA.	EACH
E.W.	EACH WAY
ELEC.	ELECTRIC or ELECTRICAL
EL. or ELEV.	ELEVATION
ENCL.	ENCLOSE and/or ENCLOSURE
EQ.	EQUAL
EQUIP.	EQUIPMENT
(E)	EXISTING
EX.	EXPANSION
E.J.	EXPANSION JOINT
EXP.	EXPOSED
EXT.	EXTERIOR
F.O.C.	FACE OF CONCRETE
F.O.M.	FACE OF MASONRY
F.O.S.	FACE OF STUD
F.O.F.	FACE OF FINISH
FIN.	FINISH
F.F.	FINISHED FLOOR
F.S.	FINISH SLAB
F.E.	FIRE EXTINGUISHER
F.E.C.	FIRE EXTINGUISHER CABINET
F.H.	FIRE HYDRANT
F.H.M.S.	FLAT HEAD METAL SCREW
F.H.W.S.	FLAT HEAD WOOD SCREW
FL. or FLR.	FLOOR
F.D.	FLOOR DRAIN
FTG.	FOOTING
FND.	FOUNDATION
GALV.	GALVANIZED
G.I.	GALVANIZED IRON
GA.	GAUGE
GL.	GLASS
GLU-LAM	GLUE-LAMINATED
GRD.	GRADE
GYP. BD.	GYPSUM BOARD
HDW.	HARDWARE
HT.	HEIGHT
H.C.	HOLLOW CORE
H.M.	HOLLOW METAL
HORIZ.	HORIZONTAL
H.B.	HOSE BIBB
I.D.	INSIDE DIAMETER
INSUL.	INSULATION
INT.	INTERIOR
INV.	INVERT
JT	JOINT
J.H.	JOIST HANGER
K.D.	KILN DRIED

LAM.	LAMINATE
LAV.	LAVATORY
M.B.	MACHINE BOLT
M.S.	MACHINE SCREW
M.H.	MANHOLE
MFG.	MANUFACTURER
M.B.	MARKER BOARD
MATL.	MATERIAL
MAX.	MAXIMUM
MECH.	MECHANICAL
MTL.	METAL
MIN.	MINIMUM
MISC.	MISCELLANEOUS
MTD.	MOUNTED
(N)	NEW
NOM.	NOMINAL
N.I.C.	NOT IN CONTRACT
N.T.S.	NOT TO SCALE
NO. or #	NUMBER
OCC.	OCCUPANT(CY)
O.C.	ON CENTER
OPNG.	OPENING
OPP.	OPPOSITE
O.H.	OPPOSITE HAND
O.F.O.S.	OUTSIDE FACE OF STUD
O.H.W.S.	OVAL HEAD WOOD SCREW
O.D.	OVERFLOW DRAIN and/or OUTSIDE DIAMETER
O.F.C.I.	OWNER FURNISHED and CONTRACTOR INSTALLED
PR.	PAIR
PART.	PARTITION
PL	PLATE
d	PENNY (NAILS)
PLAS.	PLASTER
PLYWD.	PLYWOOD
P.V.C.	POLY VINYL CHLORIDE
P.T.	PRESSURE TREATED
P.L.	PROPERTY LINE
R. or RAD.	RADIUS
R.W.L.	RAIN WATER LEADER
RWD./R.W.	REDWOOD
REINF.	REINFORCING
REQ'D	REQUIRED
R.A.G.	RETURN AIR GRILLE
R.E.	RIM ELEVATION
R.D.	ROOF DRAIN
RM.	ROOM
R.O.	ROUGH OPENING
RND.	ROUND
R.H.M.S.	ROUND HEAD METAL SCREW
R.H.W.S.	ROUND HEAD WOOD SCREW
SSD.	SEE STRUCTURAL DRAWINGS
S.T.S.M.S.	SELF TAPPING SHEET METAL SCREW
SHEATH.	SHEATHING
S.M.	SHEET METAL
S.M.S.	SHEET METAL SCREW
S.O.V.	SHUT OFF VALVE
SIM.	SIMILAR
S.C.	SOLID CORE
SPEC.	SPECIFICATION
SQ.	SQUARE
S.F.	SQUARE FEET
STAG.	STAGGERED
STD.	STANDARD
S.S.	STAINLESS STEEL
STL.	STEEL
STOR.	STORAGE
STRUCT.	STRUCTURAL
S.A.G.	SUPPLY AIR GRILLE
THRES.	THRESHOLD
T&G	TONGUE & GROOVE
T.J.	TOOLED JOINT
T.O.B.	TOP OF BEAM
T.O.C.	TOP OF CURB or CONCRETE
T.O.S.	TOP OF STEEL or SHEATHING
T.O.W.	TOP OF WALK
TYP.	TYPICAL
U.O.N.	UNLESS OTHERWISE NOTED
U.O.S.	UNLESS OTHERWISE SHOWN
V.T.R.	VENT THROUGH ROOF
VERT.	VERTICAL
V.G.	VERTICAL GRAIN
V.I.F.	VERIFY IN FIELD
V.C.T.	VINYL COMPOSITION TILE
V.W.C.	VINYL WALL COVERING
V.O.I.P.	VOICE OVER INTERNET PROTOCOL
W.C.	WATER CLOSET
W.H.	WATER HEATER
WP.	WATERPROOF
W.R.	WATER RESISTANT
W.W.M.	WELDED WIRE MESH
W.D.	WINDOW DIMENSION
W/	WITH
W/O	WITHOUT
WD.	WOOD

BLDG. CODES & STANDARDS:

2025	CALIFORNIA ADMINISTRATIVE CODE, PART 1, TITLE 24 C.C.R.	
2022	CALIFORNIA BUILDING CODE (CBC), PART 2, TITLE 24, C.C.R. (2021 INTERNATIONAL BUILDING CODE, VOLUMES 1 AND 2, WITH 2022 CALIFORNIA AMENDMENTS.)	
2022	CALIFORNIA ELECTRIC CODE (CEC), PART 3, TITLE 24, C.C.R. (2020 NATIONAL ELECTRIC CODE WITH 2022 CALIFORNIA AMENDMENTS).	
2022	CALIFORNIA MECHANICAL CODE (CMC), PART 4, TITLE 24, C.C.R. (2021 UNIFORM MECHANICAL CODE WITH 2022 CALIFORNIA AMENDMENTS).	
2022	CALIFORNIA PLUMBING CODE (CPC), PART 5, TITLE 24, C.C.R. (2021 UNIFORM PLUMBING CODE WITH 2022 CALIFORNIA AMENDMENTS).	
2022	CALIFORNIA ENERGY CODE (CENC), PART 6, TITLE 24, C.C.R.	
2022	CALIFORNIA FIRE CODE (CFC), PART 9, TITLE 24, C.C.R. (2021 INTERNATIONAL FIRE CODE WITH 2022 CALIFORNIA AMENDMENTS).	
2022	CALIFORNIA GREEN BUILDING STANDARDS CODE, PART 11, TITLE 24, C.C.R.	
2022	CALIFORNIA REFERENCED STANDARDS, PART 12, TITLE 24, C.C.R.	
2019	ASME A17.1/CSA B44 SAFETY CODE FOR ELEVATORS AND ESCALATORS	
2010	ADA STANDARDS FOR ACCESSIBLE DESIGN (28 CFR PART 35 FOR TITLE II ENTITIES)	

CCR TITLE-19, PUBLIC SAFETY, STATE FIRE MARSHAL REGULATIONS.

NFPA 13	INSTALLATION OF SPRINKLER SYSTEMS (CA AMENDED)	2022 EDITION
NFPA 14	INSTALLATION OF STANDPIPE & HOSE SYSTEMS (CA AMENDED)	2019 EDITION
NFPA 17	DRY CHEMICAL EXTINGUISHING SYSTEMS	2021 EDITION
NFPA 17A	WET CHEMICAL EXTINGUISHING SYSTEM	2021 EDITION
NFPA 20	STATIONARY FIRE PUMPS TO FIRE PROTECTION	2019 EDITION
NFPA 22	WATER TANKS FOR PRIVATE FIRE PROTECTION	2013 EDITION
NFPA 24	PRIVATE FIRE SERVICE MAINS (CA AMENDED).	2019 EDITION
NFPA 25	INSPECTION, TESTING AND MAINTENANCE OF WATER BASED FIRE PROTECTION SYSTEMS	2013 CALIFORNIA EDITION
NFPA 72	NATIONAL FIRE ALARM CODE (CA AMENDED)	2022 EDITION
NFPA 80	FIRE DOORS AND OTHER OPENING PROTECTIVES	2019 EDITION
NFPA 92	STANDARD FOR SMOKE CONTROL SYSTEMS	2018 EDITION
NFPA 110	EMERGENCY AND STANDBY POWER SYSTEMS	2019 EDITION
NFPA 170	STANDARD FOR FIRE SAFETY AND EMERGENCY SYMBOLS	2018 EDITION
NFPA 253	CRITICAL RADIANT FLUX OF FLOOR COVERING SYSTEMS	2019 EDITION
NFPA 2001	CLEAN AGENT FIRE EXTINGUISHING SYSTEMS	2018 EDITION
ICC 300	STANDARDS FOR BLEACHERS, FOLDING AND TELESCOPIC SEATING, AND GRANDSTANDS	2017 EDITION
SFM 12-10-1	POWER OPERATED EXIT DOORS	
SFM 12-10-2	SINGLE POINT LATCHING OR LOCKING DEVICES	
SFM 12-10-3	EMERGENCY EXIT & PANIC HARDWARE	
UL 38	MANUAL OPERATING SIGNAL BOXES	1999/2005 EDITION
UL 268	SMOKE DETECTORS FOR FIRE PROTECTIVE SIGNALING SYSTEMS	2016 EDITION
UL 268A	SMOKE DETECTORS DUCT APPLICATIONS	1998/2003 EDITION
UL 300	FIRE TESTING OF FIRE EXTINGUISHING SYSTEMS FOR PROTECTION OF COMMERCIAL COOKING EQUIPMENT	2005 (R2010)
UL 305	PANIC HARDWARE	2012 EDITION
UL 464	AUDIBLE SIGNALING DEVICES FOR FIRE ALARM AND SIGNALING SYSTEMS, AND ACCESSORIES	2003 EDITION
UL 521	HEAT DETECTORS FOR FIRE PROTECTIVE SIGNALING SYSTEMS	1999 EDITION
UL 864	CONTROL UNITS FOR FIRE PROTECTIVE SIGNALING SYSTEMS (W/ REVISIONS THROUGH DEC. 2014)	2014 EDITION
UL 1971	SIGNALING DEVICES FOR THE HEARING IMPAIRED	2002 EDITION

ALL CONSTRUCTION AND DEMOLITION SHALL BE IN ACCORDANCE WITH CFC CHAPTER 33 FIRE SAFETY DURING CONSTRUCTION AND DEMOLITION, CBC CHAPTER 33 SAFETY DURING CONSTRUCTION, AND THE WRITTEN SITE FIRE SAFETY PLAN. COMPLIANCE WILL BE ENFORCED.

SYMBOLS LEGEND

- 1 / A8.1 — SECTION / EXTERIOR ELEVATION: SECTION IDENTIFICATION; SHEET WHERE SECTION IS DRAWN
- 4 / A9.1 — DETAIL: DETAIL IDENTIFICATION; SHEET WHERE DETAIL IS DRAWN
- 1 / A7.1 — INTERIOR ELEVATION: INDICATES ELEVATION SHOWN; SHEET WHERE ELEVATION IS DRAWN
- CLASSROOM / 102 — ROOM IDENTIFICATION: ROOM NAME; ROOM NUMBER
- 3 — SPECIFIC NOTE
- 102A — DOOR DESIGNATION
- A — WINDOW DESIGNATION
- 1 — ADDENDUM REVISION: CLOUD AROUND REVISION
- 1 CCD — CCD REVISION: CLOUD AROUND REVISION
- 127 — FINISH NUMBER: SEE SPECS AND I.E. DWGS.
- A — EQUIPMENT LETTER: SEE EQUIPMENT SCHEDULE
- +8'-0" — CEILING HEIGHT
- 1 — WALL TYPE
- MATCH LINE
- +8'-0" — ELEV. HEIGHT
- CENTER OF
- FACE OF

DESIGN TEAM

ARCHITECT
FINNEY ARCHITECTS
380 PACIFIC STREET
SAN LUIS OBISPO, CALIFORNIA 93401
(408) 963-5710
ATTN: MARK FINNEY MARK@FINNEYARCHITECTS.COM

CIVIL ENGINEER
CLAD CONSULTING
566 CAMINO MERCADO
ARROYO GRANDE, CALIFORNIA 93420
(805) 440-0885
ATTN: ALBERTO LOPEZ ALOPEZ@CLAD-CONSULTING.COM

STRUCTURAL ENGINEER
T&S STRUCTURAL
684 CLARION COURT
SAN LUIS OBISPO, CALIFORNIA 93401
(805) 592-1012
ATTN: BRIAN T. DEAN BRIAN@TSSTRUCTURAL.COM

MECHANICAL & PLUMBING ENGINEER
CYPRESS ENGINEERING GROUP
8 HARRIS COURT, SUITE A8
MONTEREY, CALIFORNIA 93940
(408) 510-0906
ATTN: METIN SERTTUNC METIN@CYPRESSEG.COM

ELECTRICAL ENGINEER
THOMA ELECTRIC
3562 EMPLEO STREET, SUITE C
SAN LUIS OBISPO, CALIFORNIA 93401
(805) 543-3850
ATTN: JEFF THOMA JTHOMA@THOMAELEC.COM

GEOTECNHNICAL ENGINEER
EARTH SYSTEMS PACIFIC
4378 OLD SANTA FE ROAD
SAN LUIS OBISPO, CA 93401
(805) 234-9474
ATTN: NICK ZOETEWEY, PE, GE
NZOETEWEY@EARTHSYSTEMS.COM

PROJECT SUMMARY

CONSTRUCTION OF TWO (2) NEW ONE-STORY CLASSROOM BUILDINGS 060A (4,296 SF) AND 060B (3,872 SF), NEW PV PANELS ON BUILDING 060B, NEW PLAY STRUCTURE, NEW FENCING, AND ASSOCIATED SITE WORK ON EXISTING CAMPUS.

CONTRACTOR SCOPE NOTES:
AT PLAYGROUND AREA, CONTRACTOR TO INSTALL PERIMETER CURB AND BASE ROCK ONLY. PLAY SURFACING AND PLAY EQUIPMENT TO BE INSTALLED BY EQUIPMENT MANUFACTURER.

AT NON-PLAYGROUND AREAS WITH SYNTHETIC TURF SURFACING, CONTRACTOR TO INSTALL BASE ROCK AND TREX NAILER BOARD ONLY. OWNER TO INSTALL CUSHION COURSE AND SYNTHETIC TURF.

2 CONTRACTOR SHALL ALSO BE RESPONSIBLE FOR MISC. SCOPE ON SHEET T2.

THERE ARE NO DEFERRED SUBMITTALS FOR THIS PROJECT.

DRAWING INDEX

T1	TITLE SHEET
T2	SITE PLAN - ACCESS COMPLIANCE
T3	SITE PLAN - FIRE LIFE SAFETY
T4	BUILDING EXIT / EGRESS ANALYSIS
T5	CALGREEN MANDATORY MEASURES
T6	CALGREEN MANDATORY MEASURES

SHEET TOTAL = 6

CIVIL

C1	TITLE SHEET
C2	DEMOLITION PLAN
C3	DEMOLITION PLAN
C4	GRADING PLAN
C5	GRADING PLAN
C6	HORIZONTAL CONTROL PLAN
C7	HORIZONTAL CONTROL PLAN
C8	UTILITY PLAN
C9	UTILITY PLAN
C10	EROSION CONTROL PLAN
C11	DETAIL SHEET

CIVIL SHEET TOTAL = 11

ARCHITECTURAL

A0.20	NEW SITE PLAN
A0.21	ENLARGED PARTIAL NEW SITE PLAN
A0.30	SITE DETAILS
A0.40	SITE DETAILS - FENCE AND GATES
A0.50	SITE DETAILS
A2.1	NEW FLOOR PLAN
A2.2	FLOORING LAYOUT
A3.1	REFLECTED CEILING PLAN
A4.1	ROOF PLAN
A5.1	ENLARGED RESTROOM FLOOR PLANS & INTERIOR ELEVATIONS
A5.2	ENLARGED PLANS AT HVAC CLOSETS
A6.1	DOOR SCHEDULE AND DOOR DETAILS - SIGN SCHEDULE
A6.2	WINDOW TYPES AND WINDOW DETAILS
A6.3	FINISH SCHEDULE AND DETAILS
A6.4	CASEWORK DETAILS
A7.1	EXTERIOR ELEVATIONS
A7.2	INTERIOR ELEVATIONS
A7.3	INTERIOR ELEVATIONS
A7.4	INTERIOR ELEVATIONS
A7.5	INTERIOR ELEVATIONS
A7.6	INTERIOR ELEVATIONS
A8.1	BUILDING SECTIONS
A8.2	BUILDING SECTIONS
A9.1	WALL TYPES
A9.2	WALL BASE DETAILS
A9.3	EXTERIOR DETAILS
A9.4	ROOF DETAILS
A9.5	CEILING DETAILS
A9.6	FIXTURES & EQUIPMENT DETAILS

ARCHITECTURAL SHEET TOTAL = 29

STRUCTURAL

S0.1	STRUCTURAL TITLE SHEET
S0.2	STRUCTURAL SPECIFICATIONS
S0.3	STRUCTURAL SPECIFICATIONS
S1.1	TYP. STRUCTURAL DETAILS
S1.2	TYP. STRUCTURAL DETAILS
S1.3	TYP. STRUCTURAL DETAILS
S2.1	FOUNDATION PLAN
S2.2	CURB PLAN
S2.3	ROOF FRAMING PLAN
S2.4	STRUCTURAL ELEVATIONS
S2.5	STRUCTURAL ELEVATIONS
S2.6	STRUCTURAL ELEVATIONS
S2.7	STRUCTURAL ELEVATIONS
S3.1	STRUCTURAL DETAILS
S3.2	STRUCTURAL DETAILS

STRUCTURAL SHEET TOTAL = 15

MECHANICAL

M0.1	SYMBOL LEGENDS, ABBREVIATIONS, NOTES - MECHANICAL
M0.2	SCHEDULES AND PELICAN SEQUENCE OF OPERATIONS - MECHANICAL
M2.1	BUILDINGS 060A & 060B - NEW FLOOR PLANS - MECHANICAL
M4.1	BUILDINGS 060A & 060B - SECTION VIEWS - MECHANICAL
M5.1	MECHANICAL CONTROLS
M5.2	MECHANICAL CONTROLS
M6.1	DETAILS - MECHANICAL

MECHANICAL SHEET TOTAL = 7

PLUMBING

P0.1	SYMBOL LEGENDS, ABBREVIATIONS, NOTES - PLUMBING
P0.2	SCHEDULES - PLUMBING
P2.1	BUILDINGS 060A & 060B - NEW FLOOR PLANS - PLUMBING
P2.2	BUILDING 060A & 060B - NEW FLOOR PLANS - WASTE, VENT. & CONDENSATE DRAIN PIPING - PLUMBING
P6.1	DETAILS - PLUMBING

PLUMBING SHEET TOTAL = 5

ELECTRICAL

E0.01	GENERAL NOTES, LEGEND & ABBREVIATIONS
E0.02	SINGLE LINE DIAGRAM
E0.03	ELECTRICAL SCHEDULES
E0.04	LUMINAIRE SCHEDULE
E0.06	ELECTRICAL DETAILS
E0.07	ELECTRICAL DETAILS
E0.08	ELECTRICAL DETAILS
E0.10	TITLE 24 COMPLIANCE DOCUMENTATION - EXTERIOR
E0.11	TITLE 24 COMPLIANCE DOCUMENTATION - BUILDING 60A INTERIOR
E0.12	TITLE 24 COMPLIANCE DOCUMENTATION - BUILDING 06B EXTERIOR
E0.13	TITLE 24 COMPLIANCE DOCUMENTATION - BUILDING 060B INTERIOR
E0.20	ELECTRICAL SITE PLAN
E2.1	ELECTRICAL POWER/COMM FLOOR PLAN
E3.1	ELECTRICAL LIGHTING/CONTROLS PLAN
E4.1	ELECTRICAL ROOF PLAN

ELECTRICAL SHEET TOTAL = 15

FIRE ALARM

E5.1	FIRE ALARM FLOOR PLAN
E5.2	FIRE ALARM RISER
E5.3	FIRE ALARM DETAILS
E5.4	FIRE ALARM CALCULATIONS
E6.0	GENERAL COMMUNICATION PLAN NOTES, BOD
E6.1	COMM RISER/COMM DETAILS

FIRE ALARM SHEET TOTAL = 6

PHOTOVOLTAIC (ON BLDG. 060B)

PV0.01	PHOTOVOLTAIC GENERAL NOTES, LEGEND, & ABBREVIATIONS
PV0.02	PHOTOVOLTAIC SINGLE LINE DIAGRAM
PV0.03	PV LABELS
PV0.20	PHOTOVOLTAIC SITE PLAN
PV1.0	PHOTOVOLTAIC ARRAY PLAN
PV1.1	PHOTOVOLTAIC DETAILS
PV1.2	PV MODULE INSTALLATION MANUAL
PV1.3	PV MODULE INSTALLATION MANUAL
PV2.0	PHOTOVOLTAIC TITLE 24 COMPLIANCE FORMS

PHOTOVOLTAIC SHEET TOTAL = 9

SHEET TOTAL = 103

VICINITY MAP

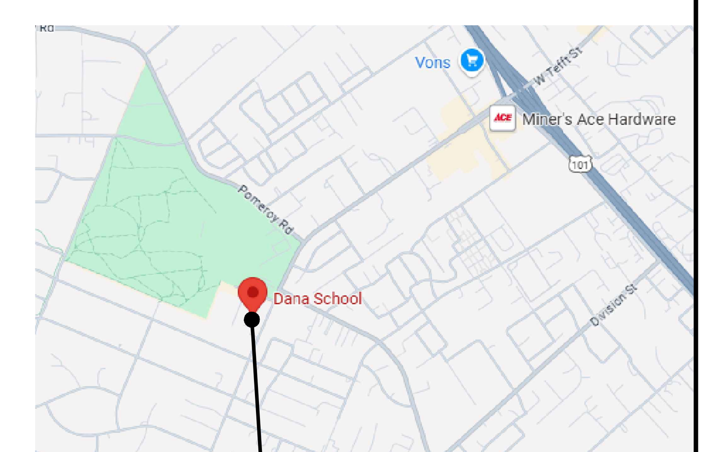

PROJECT LOCATION

N

STATEMENT OF GENERAL CONFORMANCE

APPLICATION NO.: 03-125585 FILE NO.: 40-39

THE DRAWINGS IDENTIFIED AS FOLLOWS:

- ☒ ALL DRAWING SHEETS INCLUDED IN THIS SET NOT BEARING MY STAMP AND SIGNATURE.
- ☐ DRAWING SHEETS DENOTED IN THE SHEET INDEX AS FOLLOWS:
- ☐ DRAWING SHEETS INCLUDED UNDER THE FOLLOWING PC APPROVALS:

HAVE BEEN PREPARED BY OTHER DESIGN PROFESSIONALS OR CONSULTANTS WHO ARE LICENSED AND AUTHORIZED TO PREPARE SUCH DRAWINGS (PLANS) IN THIS STATE. THEY HAVE BEEN EXAMINED BY ME FOR:

1) DESIGN INTENT AND APPEAR TO MEET THE APPROPRIATE REQUIREMENTS OF TITLE 24, CALIFORNIA CODE OF REGULATIONS AND THE PROJECT SPECIFICATIONS PREPARED BY ME, AND

2) COORDINATION WITH MY DRAWINGS (PLANS) AND SPECIFICATIONS AND ARE ACCEPTABLE FOR INCORPORATION INTO THE CONSTRUCTION OF THIS PROJECT.

PER TITLE 24, PART 1, SECTION 4-316(b): THIS STATEMENT OF GENERAL CONFORMANCE SHALL NOT BE CONSTRUED AS RELIEVING ME OF MY RIGHTS, DUTIES, AND RESPONSIBILITIES UNDER SECTIONS 17302 AND 81138 OF THE EDUCATION CODE AND SECTIONS 4-336, 4-341 AND 4-344 OF TITLE 24, PART 1.

SIGNATURE		9/25/2025 DATE
MARK FINNEY PRINTED NAME	C-24673 LICENSE NUMBER	9/30/2027 EXPIRATION DATE

(DSA STAMP AREA)

FINNEY ARCHITECTS
2155 SOUTH BASCOM AVE.
SUITE 250
CAMPBELL, CA 95008
PHONE: 408-398-1450

LICENSED ARCHITECT MARK C. FINNEY NO. C-24673 REN. 9-30-27 STATE OF CALIFORNIA

TITLE SHEET

NEW CLASSROOMS AT DANA ELEMENTARY SCHOOL
920 W TEFFT STREET, NIPOMO, CALIFORNIA 93444
LUCIA MAR UNIFIED SCHOOL DISTRICT

REVISIONS

NO.	ITEM	DATE
2	ADDENDUM 2	08/19/26

DRAWN BY: GR, JT, MB
CHECKED BY: MF, JB, JT
FA PROJECT NO: 24149
DATE: DSA V3 SUBMITTAL: 06-12-26

T1

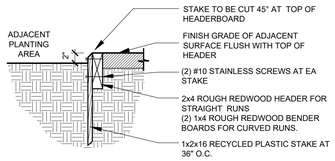

11 REDWOOD HEADER

AT EDGE OF PAVING — N.T.S

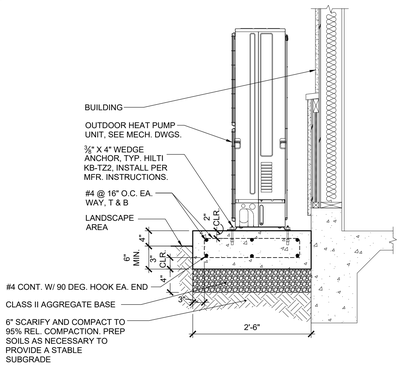

10 CONDENSING UNIT

AT LANDSCAPE AREA — 3/4"=1'-0"

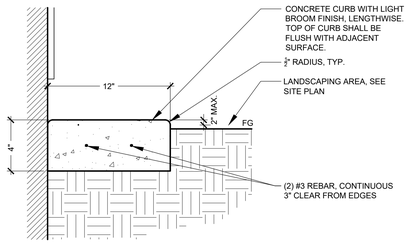

9 CONCRETE HEADER

AT BUILDING EDGE/PLANTING AREA — N.T.S

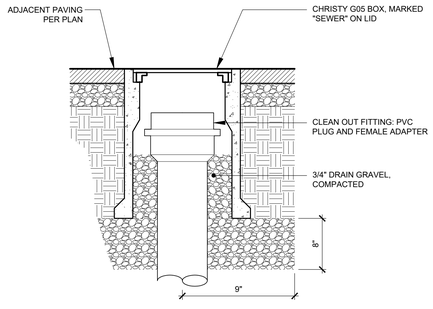

9 CLEAN OUT AT GRADE

SANITARY SEWER — NTS

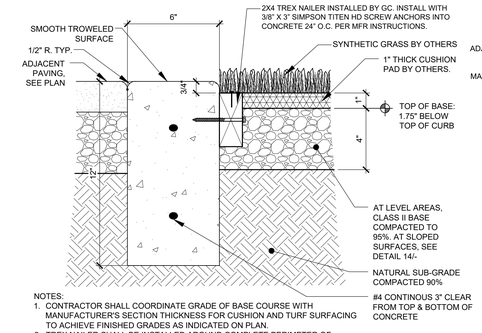

NOTES:
1. CONTRACTOR SHALL COORDINATE GRADE OF BASE COURSE WITH MANUFACTURER'S SECTION THICKNESS FOR CUSHION AND TURF SURFACING TO ACHIEVE FINISHED GRADES AS INDICATED ON PLAN.
2. TREX NAILER SHALL BE INSTALLED AROUND COMPLETE PERIMETER OF SYNTHETIC TURF SURFACING AREAS, FOR EXAMPLE WHERE TURF ADJOINS FENCE HEADER OR OTHER PAVING, TACK STRIP SHALL BE ATTACHED TO IT.

8 TURF SURFACING

AT NON-PLAYGROUND AREAS — 3"=1'-0"

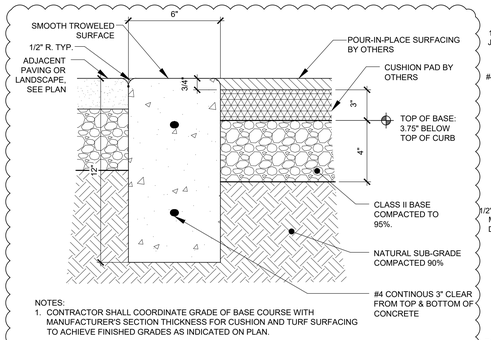

NOTES:
1. CONTRACTOR SHALL COORDINATE GRADE OF BASE COURSE WITH MANUFACTURER'S SECTION THICKNESS FOR CUSHION AND TURF SURFACING TO ACHIEVE FINISHED GRADES AS INDICATED ON PLAN.

2

7 FALL PROTECTION SURFACE & CURB

AT PLAYGROUND AREAS — 3"=1'-0"

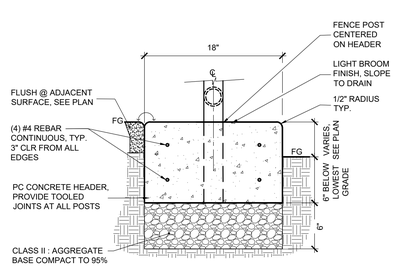

5 CONCRETE HEADER

AT FENCE — 1 1/2"=1'-0"

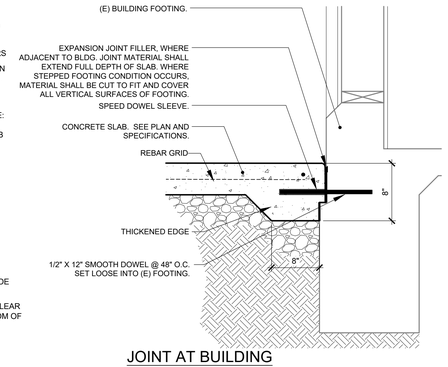

JOINT AT BUILDING

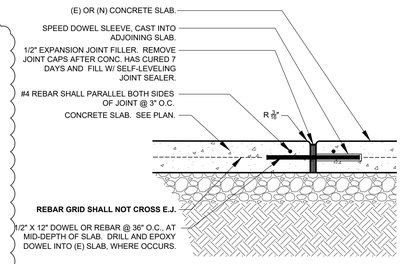

EXPANSION JOINT

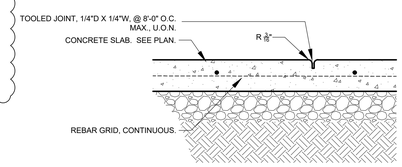

TOOLED JOINT

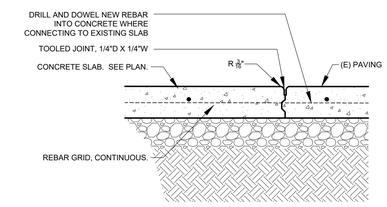

CONSTRUCTION JOINT / TO EXISTING PAVING

2 CONCRETE PAVING JOINTS

1-1/2"=1'-0"

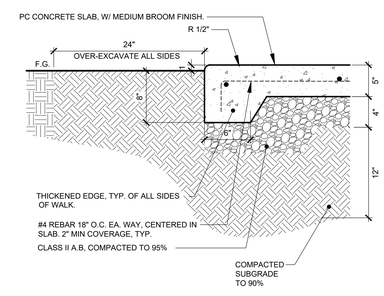

THICKENED EDGE (STANDARD) CONDITION

NOTE:
SEE CONCRETE PAVING JOINTS DETAIL FOR TYPES AND LOCATION.

1 CONCRETE PAVING

1-1/2"=1'-0"

(DSA STAMP AREA)

FINNEY ARCHITECTS
2155 SOUTH BASCOM AVE, SUITE 250
CAMPBELL, CA 95008
PHONE: 408-398-1450

LICENSED ARCHITECT MARK C. FINNEY NO. C-24073 EXP. 9-30-27 STATE OF CALIFORNIA

SITE DETAILS

NEW CLASSROOMS AT DANA ELEMENTARY SCHOOL
920 W TEFFT STREET, NIPOMO, CALIFORNIA 93444
LUCIA MAR UNIFIED SCHOOL DISTRICT

REVISIONS

NO.	ITEM	DATE
2	ADDENDUM 2	08/19/26

DRAWN BY:	GR, JT, MB
CHECKED BY:	MF, JB, JT
FA PROJECT NO:	DATE:
24149	DSA V3 SUBMITTAL: 06-12-26

A0.30

COPYRIGHT ©2024

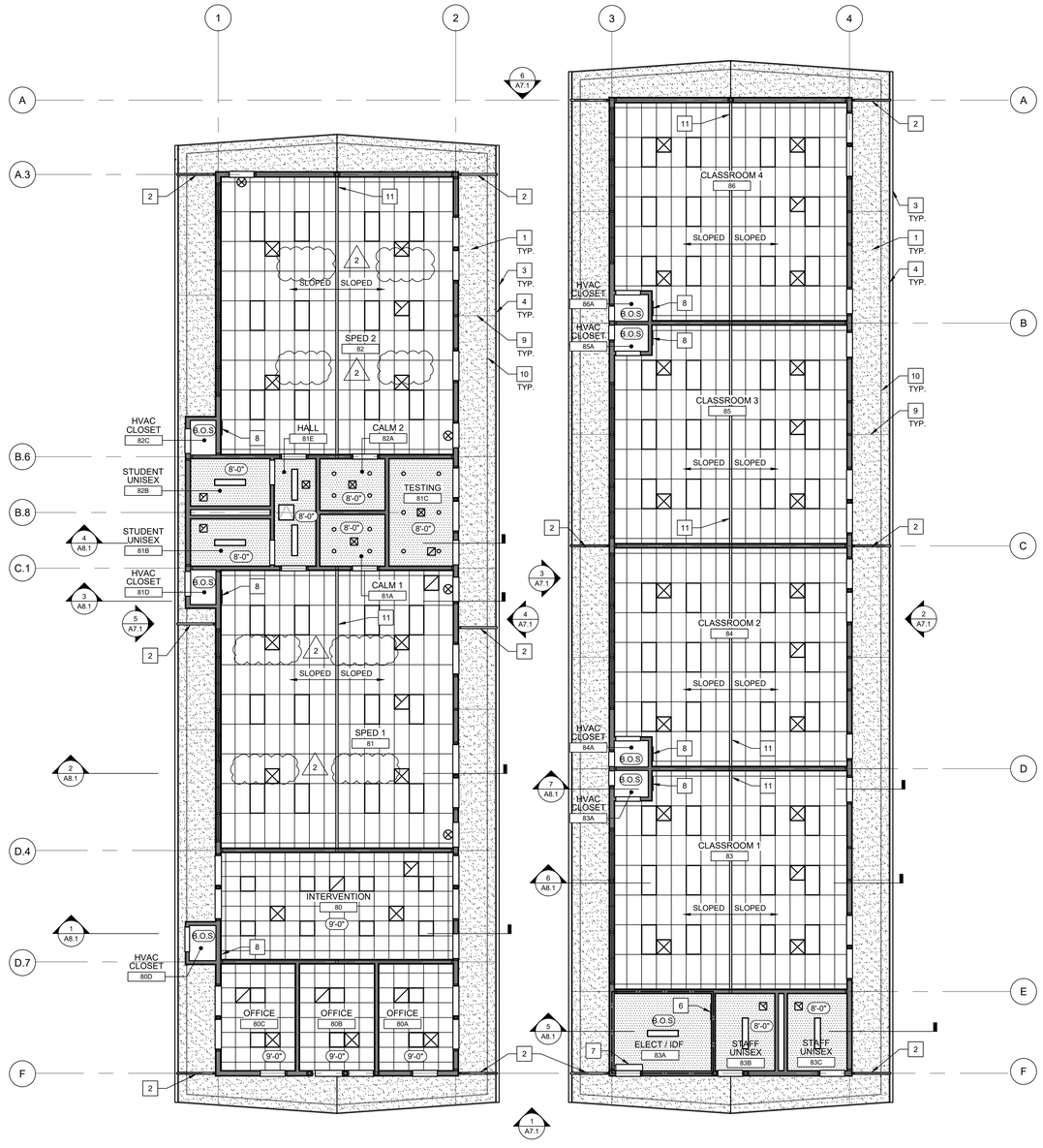

BUILDING 060A

BUILDING 060B

1 REFLECTED CEILING PLAN

1/8" = 1'-0"

0 2' 4' 8' 16' 24'

GENERAL NOTES

A. FINAL LOCATIONS OF CEILING ACCESS HATCH IN GYPSUM BOARD CEILINGS TO BE VERIFIED IN FIELD.

REFLECTED CEILING PLAN NOTES

1. CEMENT PLASTER SOFFIT ASSEMBLY, PAINTED. SEE DETAILS 7 & 8/A9.3
2. DOWNSPOUT, PAINTED. SEE DETAIL 5/A9.3
3. GUTTER, PRE-FINISHED. SEE DETAIL 1/A9.4
4. FASCIA, PAINTED.
5. NOT USED.
6. WALL MOUNTED ATTIC ACCESS PANEL, 24" X 30". SEE DETAIL 14/A9.5
7. WALL MOUNTED INDOOR COOLING UNIT, SEE MECHANICAL DRAWINGS.
8. SIDE WALL RETURN REGISTER, SEE MECHANICAL DRAWINGS.
9. CEMENT PLASTER CONTROL JOINT.
10. 1" WIDE CONTINUOUS SOFFIT VENT.
11. RIDGE AT SUSPENDED CEILING, SEE DETAIL 4/A9.5 AND STRUCTURAL DRAWINGS.

GRAPHIC KEY

STUD WALL

1-HR FIRE RATED WALL, SEE WALL TYPES.

INDICATES 2X4 ACOUSTICAL CEILING GRID SEE SHEET A9.5

INDICATES 2X2 ACOUSTICAL CEILING GRID W/ SCORED CEILING TILES, SEE SHEET A9.5

INDICATES HARD-LID GYPSUM BOARD CEILING, PAINTED.

INDICATE CEMENT PLASTER EXTERIOR SOFFIT, PAINTED. SEE DETAILS 7 & 8/A9.3

INDICATES CEILING ACCESS HATCH SEE DETAIL 16/A9.5

ROUND SOLATUBE LENS SEE DETAIL 10/A9.4

6.O.S. INDICATES BOTTOM OF STRUCTURE, EXPOSED

MECHANICAL - SEE MECHANICAL DRAWINGS

SUPPLY DIFFUSER

RETURN AIR GRILLE

EXHAUST GRILLE

ELECTRICAL - SEE ELECTRICAL DRAWINGS

EXIT SIGN

SD SMOKE DETECTOR

SURFACE MOUNTED LIGHT FIXTURE

2' X 4' LAY-IN LIGHT FIXTURE

2' X 2' LAY-IN LIGHT FIXTURE

(DSA STAMP AREA)

FINNEY ARCHITECTS
2155 SOUTH BASCOM AVE.
SUITE 250
CAMPBELL, CA 95008
PHONE: 408-398-1450

LICENSED ARCHITECT
MARK C FINNEY
NO. C-24073
EXP. 9-30-27
STATE OF CALIFORNIA

REFLECTED CEILING PLAN

NEW CLASSROOMS AT
DANA ELEMENTARY SCHOOL
920 W TEFFT STREET, NIPOMO, CALIFORNIA 93444
LUCIA MAR UNIFIED SCHOOL DISTRICT

REVISIONS

NO.	ITEM	DATE
2	ADDENDUM 2	08/19/26

DRAWN BY:	GR, JT, MB
CHECKED BY:	MF, JB, JT
FA PROJECT NO:	DATE:
24149	DSA V3 SUBMITTAL: 06-12-26

A3.1

COPYRIGHT ©2024

GENERAL NOTES

A. SEE STRUCTURAL, MECHANICAL, PLUMBING, AND ELECTRICAL DRAWINGS FOR EXTENT OF OTHER RELATED WORK.
B. PER BUILDING ENERGY REPORT, THE ROOF FRAMING SHALL HAVE A MINIMUM R-38 INSULATION.
C. THE ROOF SYSTEM SHALL HAVE CLASS A FIRE RATING.
D. ALL ROOFING PENETRATIONS SHALL BE FLASHED. SEE DETAIL 4/A9.4 FOR FLASHING AT PIPE THRU ROOF.
E. CONTRACTOR SHALL BE RESPONSIBLE TO MAINTAIN WATER TIGHTNESS AND PROVIDE PROTECTION AT ANY/ALL OPENINGS IN THE ROOF LEFT AT THE END OF EACH CONSTRUCTION DAY.

ROOF PLAN NOTES

1. NOT USED
2. RIDGE, SEE DETAIL 3/A9.4
3. RAKE, SEE DETAIL 2/A9.4
4. EAVE WITH GUTTER, SEE DETAIL 1/A9.4
5. DOWNSPOUT, SEE DETAIL 5/A9.3
6. VENT THRU ROOF, SEE PLUMBING DRAWINGS AND DETAIL 4/A9.4
7. VENTILATOR, SEE MECHANICAL DRAWINGS.
8. PV PANEL, SEE ELECTRICAL DRAWINGS.
9. VENT THRU ROOF, SEE PLUMBING DRAWINGS AND DETAIL 4/A9.4. COORDINATE LOCATION TO NOT CONFLICT WITH PV PANELS.

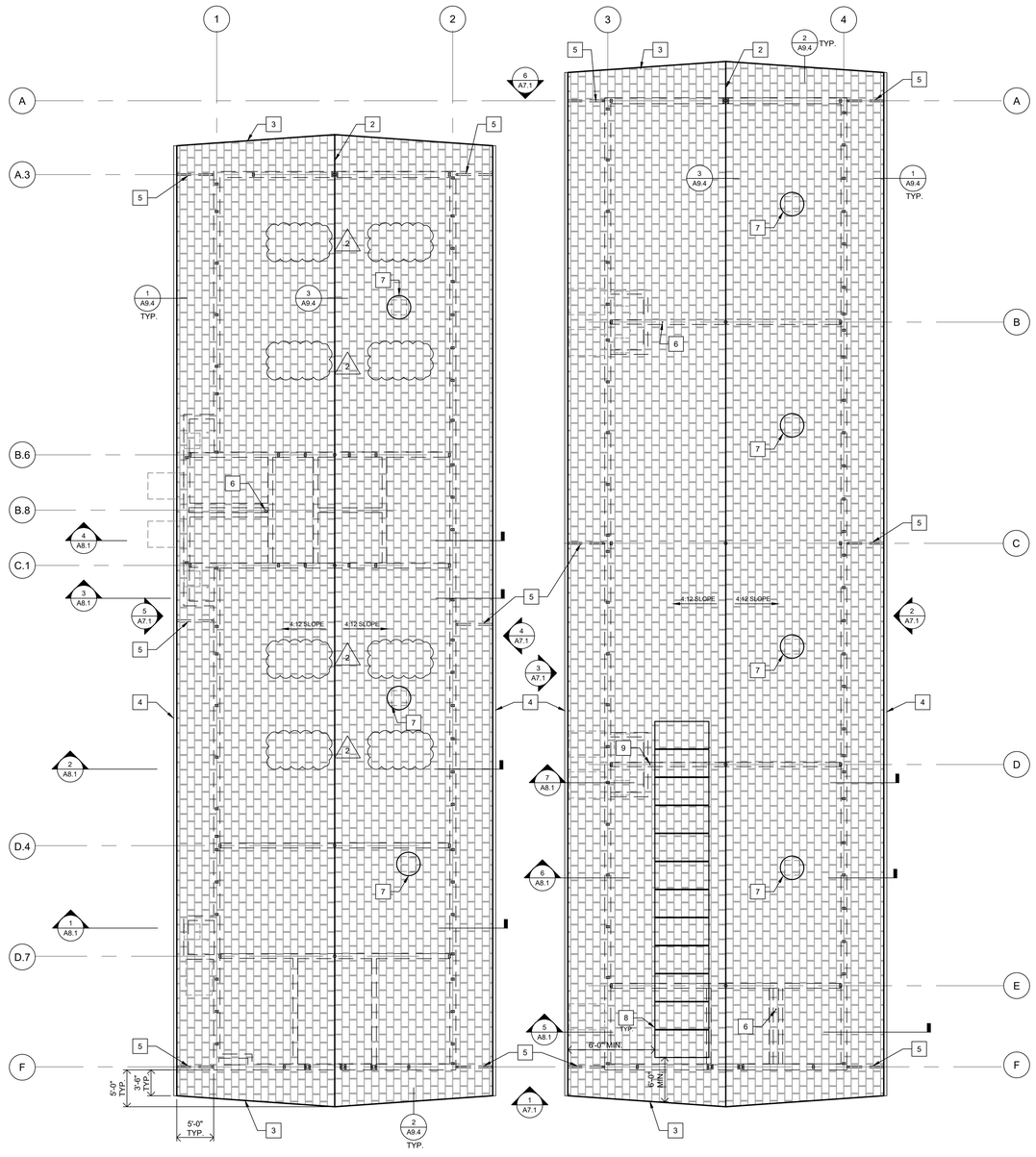

BUILDING 060A

BUILDING 060B

1 ROOF PLAN

1/8" = 1'-0"

(DSA STAMP AREA)

FINNEY ARCHITECTS
2155 SOUTH BASCOM AVE.
SUITE 250
CAMPBELL, CA 95008
PHONE: 408-398-1450

LICENSED ARCHITECT
MARK C FINNEY
NO. C-24073
EXP. 9-30-27
STATE OF CALIFORNIA

ROOF PLAN

NEW CLASSROOMS AT
DANA ELEMENTARY SCHOOL
920 W TEFFT STREET, NIPOMO, CALIFORNIA 93444
LUCIA MAR UNIFIED SCHOOL DISTRICT

REVISIONS

NO.	ITEM	DATE
2	ADDENDUM 2	08/19/26

DRAWN BY:	GR, JT, MB
CHECKED BY:	MF, JB, JT
FA PROJECT NO:	DATE:
24149	DSA V3 SUBMITTAL: 06-12-26

A4.1

COPYRIGHT ©2024

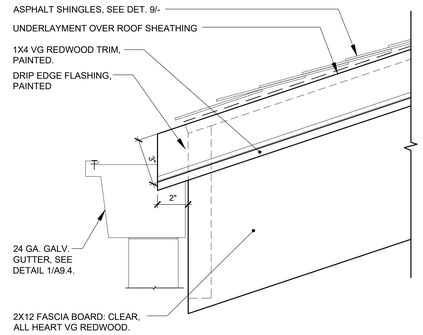

8 FASCIA AT GABLE END

LOWER END 3"=1'-0"

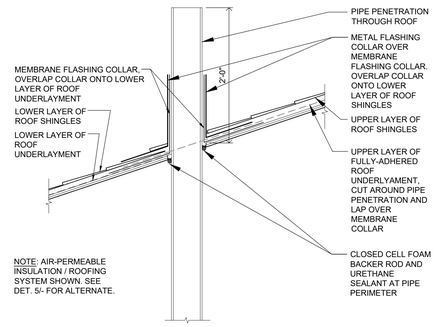

4 PIPE THRU ROOF FLASHING

ASPHALT SHINGLE ROOF 1-1/2"=1'-0"

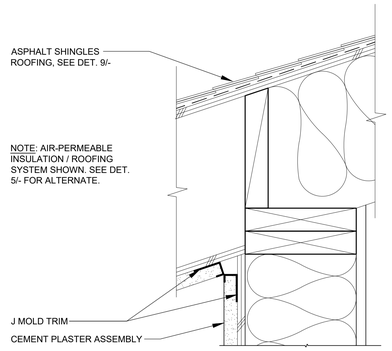

7 EAVE TO WALL TRANSITION

3"=1'-0"

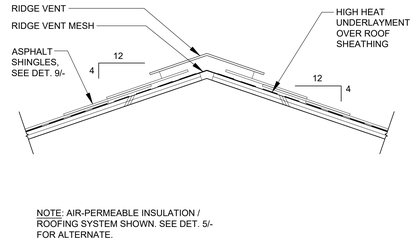

3 RIDGE

ASPHALT SHINGLES 3"=1'-0"

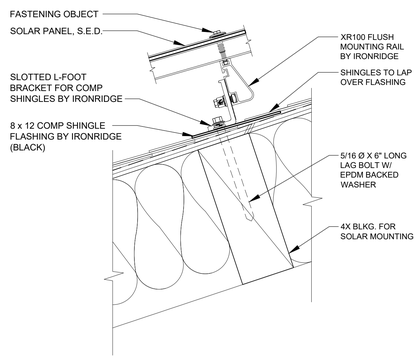

10 SOLAR PANEL MOUNTING

3"=1'-0"

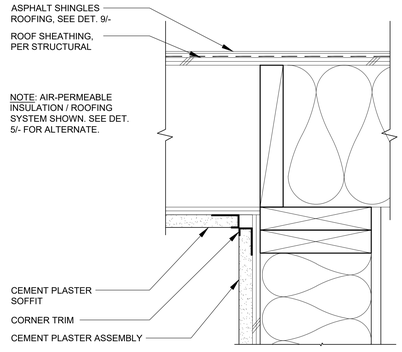

6 RAKE TO WALL TRANSITION

3"=1'-0"

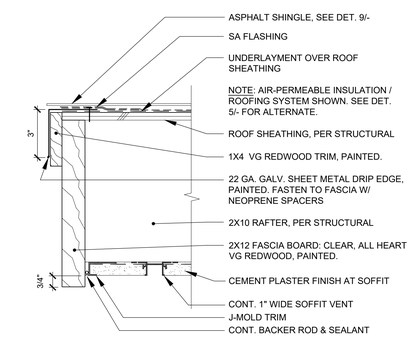

2 RAKE

ASPHALT SHINGLES 3"=1'-0"

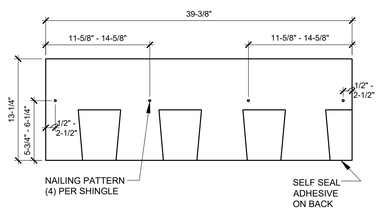

BASIS OF DESIGN: TIMBERLINE SERIES BY GA, ESR-1475
INSTALL PER MFG'S INSTALLATION INSTRUCTIONS AND ESR-1475.

FASTENERS MUST COMPLY WITH ASTM F1667 AND MUST BE MINIMUM NO. 12 GAGE, 3/8" Ø HEAD, GALVANIZED, STAINLESS STEEL, BARBED, DEFORMED, OR SMOOTH-SHANK ROOFING NAILS. FASTENERS MUST BE OF SUFFICIENT LENGTH TO PENETRATE 3/4" INTO THE SHEATHING, OR THROUGH THE SHEATHING, WHICHEVER IS LESS.

9 ASPHALT SHINGLES ROOFING

NAILING PATTERN 1-1/2"=1'-0"

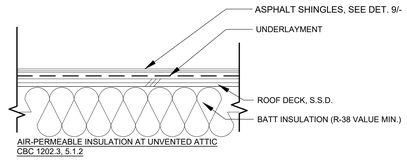

5 ASPHALT SHINGLE ROOFING

3"=1'-0"

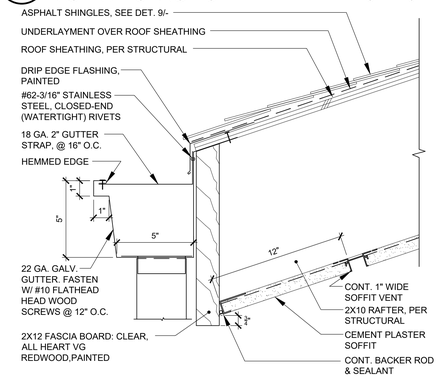

1 EAVE WITH GUTTER

3"=1'-0"

2

COPYRIGHT © 2024

(DSA STAMP AREA)

FINNEY ARCHITECTS
2155 SOUTH BASCOM AVE.
SUITE 250
CAMPBELL, CA 95008
PHONE: 408-398-1450

LICENSED ARCHITECT
MARK C. FINNEY
NO. C-24073
EXP. 9-30-27
STATE OF CALIFORNIA

ROOF DETAILS

NEW CLASSROOMS AT
DANA ELEMENTARY SCHOOL
920 W TEFFT STREET, NIPOMO, CALIFORNIA 93444
LUCIA MAR UNIFIED SCHOOL DISTRICT

REVISIONS

NO.	ITEM	DATE
2	ADDENDUM 2	08/19/26

DRAWN BY:	GR, JT, MB
CHECKED BY:	MF, JB, JT
FA PROJECT NO:	DATE:
24149	DSA V3 SUBMITTAL: 06-12-26

A9.4

WOOD

1. GENERAL

1.1. The framing notes on the drawings form a part of this section and have the same force and effect as written out in full herein. Refer to the architectural specifications for additional requirements.

3.13 Special Inspections per DSA 103.

2. MATERIALS

2.1. Lumber: shall be Douglas Fir-Larch, S4S, unless noted otherwise (this does not include Douglas Fir-Larch-North or Douglas Fir-South), and it shall be manufactured, graded, and bear the grade mark of WCLIB Standard Grading Rules 16 or WWPA Grading Rules; moisture content at time of installations shall not be over 19% or less than 7%.

Member	Grade	F_b (PSI)
2x & 3x Studs & Joists	No. 1 (Where Noted)	1,200
2x & 3x Studs & Joists	No. 2 UNO	900
Posts and Beams (4x and Larger)	No. 1 & Better	1,200
LVL (per ICC ESR-1387)	2.0E	2600
LSL (per ICC ESR-1387)	1.55E	1900
PSL (per ICC ESR-1387)	2.2E	2900

a) Preservative Treatment: Lumber in contact with concrete or masonry, or where exposed to weather, moisture or soil, shall be preservative pressure-treated per AWPA Standards (or "wolmanized" for PSL members) and CBC Section 2304.12.2.7. Each piece of lumber shall bear the mark of an approved testing agency. ACQ-treated shall be used when it is exposed to weather or may come into contact with soil, moisture or "liquid" water (e.g. rain, seepage, surface run-off, etc.). Borate-treated wood may be used for interior dry conditions (such as a sill plate on a concrete or masonry wall that will be covered and waterproofed). The maximum moisture content of treated wood is 14%. When necessary to cut, notch, bore, or splice treated lumber, thoroughly paint newly cut surfaces with same preservative used in the original treatment of the lumber.

b) Clearances to Soil: The floor assembly (including posts, girders, joists and subfloor) shall be of naturally durable or preservative-treated wood, in accordance with AWPA U1 (Commodity Specifications A or F) for above-ground use (per CBC 2304.12.2.6) where any of the following conditions occur:
   i) Wood joists or the bottom of a wood structural floor without joists are closer than 18", or wood girders are closer than 12" to the exposed ground in crawl spaces or unexcavated areas located within the perimeter of the building foundation.
   ii) Wood framing members, including wood sheathing, which rest on exterior foundation walls and are less than 8" from exposed earth.

2.2. Sheathing: Shall be APA rated; thickness per plan; Panel Index (PI) or "Roof/Floor span rating" per plan, however rating shall not be less than 40/20 for floor sheathing or 24/0 for roof sheathing. Additionally, sheathing shall conform to DOC PS 1 or PS 2, CBC Section 2308.5.11, Table 2308.5.11, and to the following (or better), except where noted otherwise:
a) Where sheathing may be subjected to repeated wetting and redrying or long-term exposure to weather or similar conditions:
   i) "Exterior Plywood" – Grade C-C or Structural 1 C-C with exterior glue, 4-ply minimum, per APA PS 1-09.
b) Other conditions:
   i) Plywood – Grade C-D with exterior glue (aka "CDX"), Exposure 1 and 4-ply minimum, per APA PS 1-09.
   ii) Composite Panel, Oriented Strand Board (OSB), or other Mat-Formed Structural-Use Panel – Exposure 1, per APA 1-09 or 2-10.
   iii) Where "Structural 1" (or "Struct 1" or "ST1") is required per the plans, use Grade Structural 1 sheathing per APA PS 1-09 or 2-10.

2.3. Rough Hardware:
a) Nails: Provide common wire nails as indicated in the Fastening Schedule (CBC Table 2304.10.2) and the Structural Plans. See requirements below for fasteners in treated wood.
b) Bolts, Nuts, Washers, Lag & Wood Screws shall be of standard manufacture, conforming to the National Design Specification (NDS) of the American Forest & Paper Association (AF&PA), 2018 Edition. Hardware exposed to weather, soil or liquids shall be hot dip galvanized or stainless steel. Bolts shall conform to ASTM A307 or F1554 Grade 36, unless noted otherwise.
c) Framing Connectors:
   i) Metal connectors for wood construction shall be Simpson Strong-Tie, or approved equal, unless noted otherwise. Product callouts on plans refer to Simpson Strong-Tie model number. Approved Equals may only be used with prior approval from the Building Department and the Engineer.
   ii) Provide the type of nails specified by the manufacturer and fully drive nails into all holes of the connector (including round and triangular holes), unless specifically noted otherwise on the plans.
   iii) Connectors shall be galvanized or have another factory-applied protective finish.
   iv) Connectors and hardware exposed to weather shall have minimum G185 factory galvanized coating (or equivalent) or shall be post hot-dip galvanized or shall be stainless steel.
   v) Connectors in contact with pressure-treated or fire-retardant treated wood shall be minimum G185 factory galvanized coating (or equivalent) or shall be post hot-dip galvanized or shall be stainless steel per CBC 2304.10.6. *[Exception: If pre-approved by the Building Department, G90 or standard coating shall be allowed.]*
   vi) Bolts shall conform to ASTM A307 or F1554 Grade 36 unless noted otherwise.
   vii) Substitute LTP5 connectors for LTP4 connectors in cases where plywood thickness prevents all nails in the LTP4s from being driven into solid wood framing as detailed. (If the LTP5 nails cannot be driven into solid wood framing, contact T&S.) Connectors shall be installed in strict accordance with ICC ESR-3096 & ER-112.
d) Powder-Actuated or Power-Driven Fasteners (or "Shot Pins"):
   i) Shall be by Hilti Inc., Simpson Strong-Tie or approved equal. Product and installation shall be per the manufacturer's respective ICC report: ICC ESR-2379 (Hilti X-P), ICC ESR-2811 (Simpson GDP), or per approved equal.
   ii) Shank diameter of shot-pins shall be 0.145" min. , with a min. 3/4" diameter washer and 1 1/4" embedment (UNO).
   iii) Shotpins may be used for attachment of miscellaneous furring, framing, and interior non-bearing walls to concrete or masonry. (Anchor bolts, per the "Foundations & Concrete" section of these specifications, must be used for sill plates in shearwalls and bearing walls.)
e) Strong-Drive WSNTL SUBFLOOR Screws are recommended to be used in lieu of nails specified on the plans for attachment of floor and roof sheathing, unless specifically prohibited otherwise. Screws must be by Simpson Strong-Tie and installed in strict accordance with ICC ESR-1472. Substitutions by other manufacturers will only be allowed if substitute has an ICC approval with shear values equal to or greater than those in ESR-1472. Refer to the General Notes on the Structural Title Sheet.

3. EXECUTION

3.1. General Installation Requirements: Fabricate, size, install, connect, fasten, bore, notch, and cut wood and plywood with joints true, tight, and well-nailed, screwed or bolted as required, members to have solid bearing without being shimmed, unless noted otherwise. Set horizontal members subject to bending with the crown up. Install framing plumb, square, true and cut for full bearing. Splices are not permitted between bearings. Use full lengths unless otherwise specified. Notching, drilling, splicing, or cutting of any structural member is not permitted without prior approval. Reinforce or replace wood framing members damaged by erroneous cutting as directed by the engineer. Perform cutting for other trades under the direction of trade involved. Whenever necessary to avoid splitting, sub-drill for nails and screws with the diameter of the hole smaller than that of nails or screws.

3.2. Nailing: Conform to CBC Table 2304.10.2, unless specifically noted otherwise. Nail plywood as specified on the plans with perimeter nails not closer than ½" from the edges. Do not overdrive nails through the face grain of the plywood; over-driven plywood nails may result in rejection and replacement of plywood panel by Inspector or Engineer. Except for plywood, nails shall not be driven closer together than half their length nor closer to the edge or end of lumber than one-quarter their length. The penetration of nails or spikes into pieces receiving the point shall not be less than half the nail length, except that 16d may be used to connect pieces of 2" nominal thickness.

3.3. Lag Screws: Install lag bolts (or "screws") with the base of the head flush with the surface of the connected member. Bore lead holes approximately three-quarters of the diameter and same depth as shank (except when not required by the manufacturer, such as for Simpson SDS Screws). Provide a standard washer under the head of the lag when bearing upon wood. Install by using a wrench, not by driving with a hammer. Soap or other lubricant shall be used on the lag screws or in the lead holes to facilitate insertion and prevent damage to the lag screws.

3.4. Bolts: Drill bolt holes 1/32" to 1/16" larger than bolt diameter such that bolts fit tight. Provide standard washers under the heads and nuts when bearing upon wood. When bolting multiple members together, the threaded portion of the bolt may not extend more than 1/4 of the bolt bearing area. Holdown bolts shall be torqued tight. The inspector is to verify that the bolts are installed and tight.

3.5. Hardware Approvals: The following hardware shall be installed per the appropriate ICC (ESR) and IAPMO (ER) approvals listed below. (Verify current report number with the mfr. For hardware not listed, obtain report numbers from the mfr.)

HTT, LTP4, RSP4 & UFP10:	per ER-130, ICC ESR-2606, ESR-2613, ESR-2616
HDU, HDQ, HHDQ, & DTT2:	per ESR-2330
LU, LUS, LUP, AB, EPB & LCB/CB:	per ESR-3096, ESR-2549, & ER-3050
HGUS,IUS,HHGU,HU, and HUC:	per ESR-2549, & ESR-2552
SSTB & SB anchors:	per ESR-2611
SDS Screws:	per ESR-2236
Straps & Ties (CMST, CS, MST, L3, T2, H, LST & others):	per ICC ESR-2105, ESR-2613, & ESR-2920, ER-112

3.6. Sills on Concrete or Masonry: Anchor per "Foundations & Concrete" section of the Specifications. Tighten with washers and nuts to level bearing. Use pressure treated lumber per "Wood" Section of the Specifications.

3.7. Wood Stud Walls, Partitions, and Furring: Use studs of sizes and spacing shown on the plans, with single plate at bottom and doubled plate at top unless otherwise shown. Stagger joints in double members at top plate by at least four feet and splice joints per structural details. Studs shall be continuous between top and bottom plates, unless specifically noted otherwise. Additionally:
a) Wall Stud Sizes: (Unless specifically noted otherwise on the plans.) Use 2x4 studs at 16" o.c. for walls less than 10'-0" tall. Walls 10'-0" to 16'-0" tall shall be constructed of 2x6 studs at 16" o.c. Request specifically engineered wall details for walls greater than16'-0" tall.
b) Blocking: Provide min. one row of nominal 2" thick blocking of same width as stud, fitted snugly and spiked into studs at mid-height of partitions or walls over 6'-0" high. Provide blocking at a maximum spacing of 6'-0" o.c. Cripple walls (or "pony walls") less than 14" in height shall be solid blocking.
c) Notching: In exterior and bearing walls, notches in studs shall not exceed 25% of the stud depth (7/8" for 2x4 and 1 3/8" for 2x6). Non-bearing partition walls may be notched not greater than 40% of the stud depth.
d) Drilling Holes: In exterior and bearing walls holes in studs shall not exceed 40% of the stud depth (1 3/8" for 2x4 and 2 1/4" for 2x6). Non-bearing partition walls may be drilled not greater than 60% of the stud depth.
e) Angles and Overhangs: Form corners (and where stud partitions and wood vertical furring meet) with blocked triple studs or as detailed. Form openings in wood partitions with double studs at each side, and 4x headers across top resting on short studs at each end. Headers shall be 4x6 min., unless noted otherwise on the plans.
f) Bearing: Provide a minimum of 1½" of bearing for headers unless noted otherwise on plans. Members bearing on prefabricated hangers are to have full bearing and nailing per manufacturer's specifications.

3.8. Posts: Posts on upper levels shall be stacked on posts of equal size at levels below, unless a larger post is specified on the plans. Blocking shall be used to fully transfer the post area through floors. This arrangement shall continue until the post is supported by a designed beam or the foundations. Posts inside walls shall bear on sill plates, and isolated posts shall be seated in Simpson post or column bases, unless noted otherwise on the plans. Posts shall be continuous between top and bottom plates, unless specifically noted otherwise. Headers framing into continuous posts without trimmer studs shall be supported in Simpson HUC hangers unless noted otherwise on the plans.

3.9. Roof and Ceiling Framing: Provide the rafters, joists, and purlins as shown on the plans. Place with the crown edge up. Conform to the following requirements unless noted otherwise:
a) Bridging/Blocking: Provide min. 2x thick solid wood blocking, cut in between and the same depth as the joists at a spacing of no greater than 8'-0" o.c., unless noted otherwise. Provide blocking at plywood panel edges, unless noted otherwise (see below). Refer to the plan for additional requirements (e.g. where 3x blocking or closer nail spacing is required).
b) Bridging/Blocking in I-Joist Framing: When using I-joists, bridging or blocking at 8'-0" o.c. may not be required. In I-joist roofs and ceilings, install blocking or cross-bridging in accordance with the manufacturer's specifications, and only omit the blocking or cross-bridging when specifically allowed to by the manufacturer. Note that blocking is required in other locations specified herein and on the plans.
c) Roof Sheathing: Install plywood panels with the face grain across the framing and close joints and nail at each support. Nail with common nails specified on the framing plans. Provide cant strips and saddles where shown or necessary to pitch water to drain. Sheathing installation shall conform to APA recommendations. Per AF&PA best practices, we recommend providing 1/16" to 1/8" max. spaces at all panel edge and end joints.
d) Sheathing Joints: Provide min. 2x thick solid blocking of the same depth as the joists (or top chords) or 3x4 flat blocking under plywood edges.

2

e) Use LU hangers for sawn lumber framing, unless noted otherwise per plan. Provide hangers to match framing member size. Connectors shall be installed in strict accordance with ICC ESR-2552.

3.10. Shearwalls: Shearwall type and nailing shall be per the plans and the shearwall schedule on plans. Shearwalls shall extend horizontally between openings unless noted otherwise. Shearwall lengths shown on plans are minimum required. Upper floor shearwalls shall extend through attics to the roof diaphragm. (OSB may be used in lieu of Plywood per the "Sheathing" section of these specifications; plywood may not be substituted for OSB without consent of T&S.) Conform to the following requirements unless noted otherwise:
a) Transfer nailing and anchorage shall be per the structural details. Over driving of nails through the panel surface may be cause for rejection of panel by the Inspector or the Engineer. Shearwall and holdown anchors shall be nailed with common nails. Edge nails to have a minimum ½" edge distance.
b) Per AF&PA best practices, we recommend providing 1/16" to 1/8" max. spaces at all panel edge and end joints.
c) Fasteners in pressure-treated wood (including foundation sill plates) shall be of hot-dipped zinc coated galvanized steel or stainless steel (per CBC 2304.10.6).
d) Where 3x framing is required, stagger edge nails. 3x framing, as noted on the shearwall schedule, is required as follows:
   i) At panel joints.
   ii) Sill plates on masonry or concrete.
   iii) Sill plates at two-sided shearwalls, i.e. sheathing on both sides. (At existing conditions, where approved by the engineer, plates may be double 2x's spiked w/ 2-16d at 6" o.c. with boundary nails staggered between alternate plates.)

3.11. Engineered Lumber:
a) Parallel Strand Lumber (PSL), Laminated Veneer Lumber (LVL), and Laminated Strand Lumber (LSL) Beams shall be manufactured by Weyerhaeuser Trus Joist. Installation shall be in accordance with the manufacturer's specifications and the approved ICC Evaluation Report (ESR-1387). Substitutions will only be allowed with prior written approval of the Engineer.
b) Installation shall be in accordance with the approved ICC Report and per the manufacturer's specifications.
c) LVL beams shall comprise of multiple 1¾" thick members and be connected with 16d common nails, ½" bolts or ¼" lag screws in accordance with the manufacturer's specifications. If thicker LVL beams are available from the manufacturer a single solid piece may be used in lieu connecting multiple 1¾" thick pieces.
d) Beam bearing shall be 1½" minimum length and the full width of the beam. Lateral support of beams at bearing points is required. Additionally, lateral support of beam compression edge is required at 24" o.c.
e) Beams shall not be cut, notched or drilled without specific written approval of the manufacturer.
f) Minimum Nail Spacing Along Member Edge:

Nail Type and Size		LVL	PSL		LSL
		Minimum Member Thickness (in.)			
Penny Weight	Dia. x Length	1.5	1.75	1.25	≥1.75
8d Common	0.131x2.5	4"	4"	4"	3"
10d Common	0.148x3.0	5"	4"	4"	3"
12d Common	0.148x3.25	5"	4"	4"	3"
16d Common	0.162x3.5	8"*	6"	6"†	6"†

*Minimum Spacing decreased to 5 in when nail penetration ≤ 1.25"
†Minimum Spacing decreased to 4 in when nail penetration ≤ 1.25"

g) Engineered wood members shall not be used in locations subject to weather or moisture, unless fully protected from moisture. When engineered wood members are delineated on the plans for use in exterior or exposed conditions, provide protection per the architect, or use wolmanized or preservative-treated lumber or similar wood with weather resistance. Obtain approval from the Engineer prior to any substitutions.
h) Other manufacturers' products will be considered, however they may only be used with prior written approval from the Engineer.
i) Use HU hangers for LVL and LSL framing unless noted otherwise per plan. Provide hangers to match framing member size. Connectors shall be installed in strict accordance with ICC ESR-2552.

COPYRIGHT © 2024

(DSA STAMP AREA)

FINNEY ARCHITECTS
2155 SOUTH BASCOM AVE.
SUITE 250
CAMPBELL, CA 95008
PHONE: 408-398-1450

REGISTERED PROFESSIONAL ENGINEER
BRIAN T. DEAN
S 6087
STRUCTURAL
STATE OF CALIFORNIA
S&S
08/19/26
PRINCIPAL

800.579.3881
www.tsstructural.com
T&S STRUCTURAL
SAN LUIS OBISPO
PASADENA
SANTA BARBARA
NORTHERN CALIFORNIA
HEADQUARTERS:
684 Clarion Court
San Luis Obispo, CA 93401

STRUCTURAL SPECIFICATIONS

NEW CLASSROOMS AT
DANA ELEMENTARY SCHOOL
920 W TEFFT STREET, NIPOMO, CALIFORNIA 93444
LUCIA MAR UNIFIED SCHOOL DISTRICT

REVISIONS

NO.	ITEM	DATE
2	ADDENDUM 02	8/19/2026

DRAWN BY:	T&S NO:	AMB
CHECKED BY:	240520	BTD
PROJECT NO: 24149	DSA V3 SUBMITTAL:	DATE: 06-15-26

S0.3

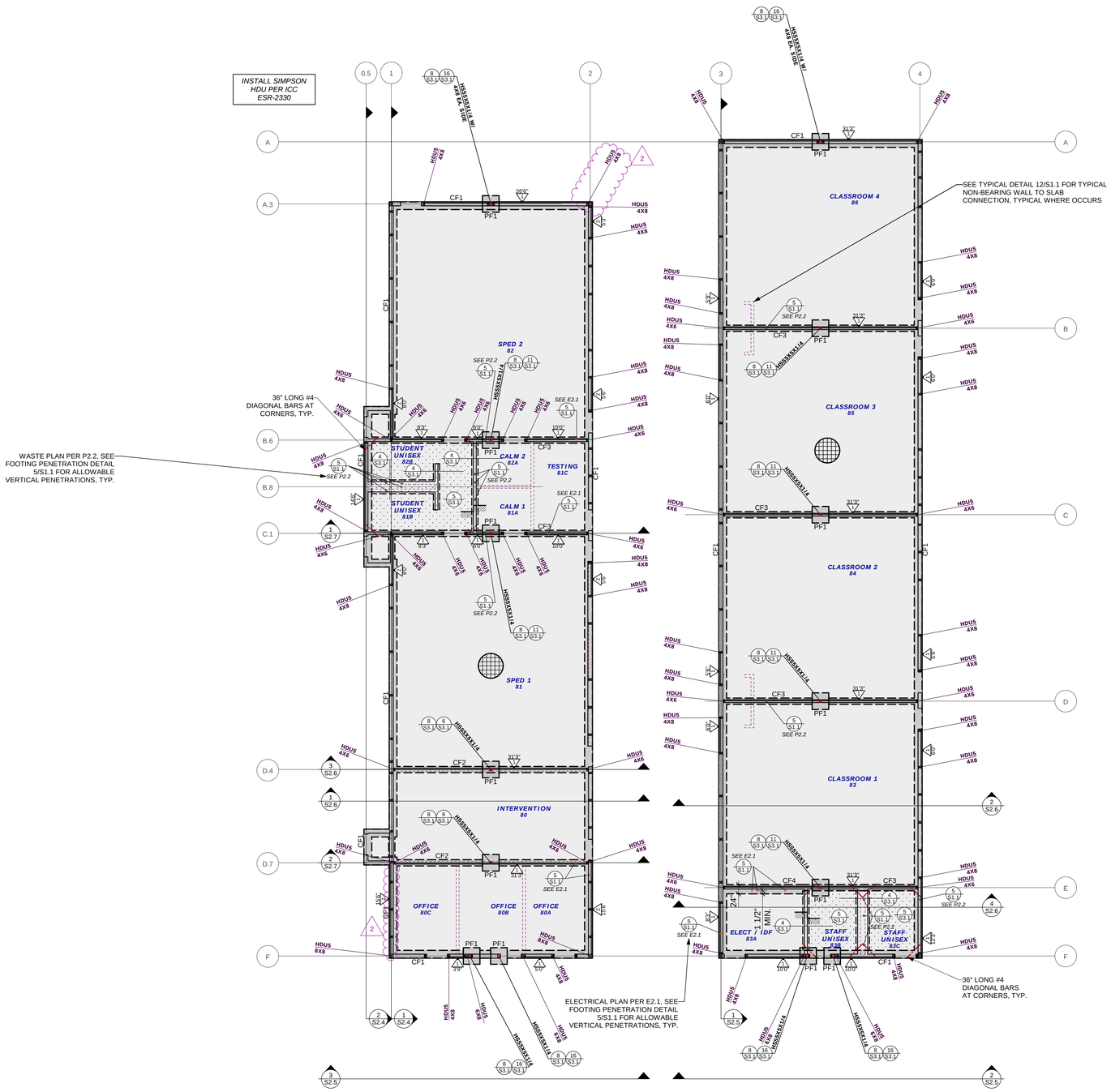

HDU5 MAY BE SUBSTITUTED WITH HDUE7

SHEATH ALL EXTERIOR NON-SWS AS 'DELTA 1," MIN., TYP. PER ARCH.

SHEARWALL SCHEDULE

NO.	DESCRIPTION: SHEATHING MATERIAL	NO. OF SIDES	NAILING[1]: SIZE	BOUNDARY SPACING	EDGE SPACING	TRANSFER ALTERNATIVES: (2310)[2] 5/8" A.B.	(2304) SDS[3] Screw	SDWS[4] Screw	(2306) LTP4	LTP5	A35	(2308) -	(2310) -	(2312) -	VALUE (plf)
						-	2236	2236	-	3096	3096	ER-110	-	-	ICC ESR-(UNO)
1 (1)	1/2" ST1 PLYWOOD/OSB	1	10d	6"	6"	48"	9"	12.5"	-	11"	11"	14"	-	-	3"	340
1	1/2" ST1 PLYWOOD/OSB	1	10d	4"	4"	35"	6"	8"	-	7"	7"	9"	-	-	2"	510
1	1/2" ST1 PLYWOOD/OSB	1	10d	3"	3"	27"	4"	6"	-	6"	5"	7"	-	-	1.5"	665
1	1/2" ST1 PLYWOOD/OSB	1	10d	2"	2"	20"	3.5"	4.5"	-	4.5"	4"	5"	-	-	1"	870
1	1/2" ST1 PLYWOOD/OSB	2	10d	4"	4"	17"	3"	4"	-	4"	3"	4"	-	-	-	1020
1	1/2" ST1 PLYWOOD/OSB	2	10d	3"	3"	13"	2"	2"	-	3"	2.5"	3"	-	-	-	1330
1	1/2" CDX PLYWOOD/OSB	2	10d	2"	2"	10"	-	-	-	2"	2"	2"	-	-	-	1740

FOOTNOTES:

1 Use COMMON NAILS ONLY for all sheathing. Field nailing is 12" o.c. Provide 3x framing at all panel joints UNO.
2 Anchor bolts for shearwalls must have 3" x 3" x 0.229" plate washers min., install per 2021 AWC SDPWS 4.3.6.4.3.
3 Embed SDS 2" min. into framing below (min. length is usually 4 1/2" at 2x sills & 6" at 3x sills, V.I.F.). [ICC ESR-2236]
4 Embed SDWS 2" min. into framing below (min. length is usually 5" at 2x sills & 6" at 3x sills, V.I.F.). [IAPMO ER-192]
5 Embed 3/8" lags 3" min. into framing below per plan (usually 6" lags at 2x sills & 7" lags at 3x sills, V.I.F.).
6 Staggered screw pattern required. Use 4x min. rim/beam/blkg. below as required for 1" edge distance & 1 1/2" spacing between rows.
7 Install rim/beam/blkg. to match full width of top plates, and alternate clips on each side of wall.
8 16d transfers are NOT allowed through 3x sills or sheathing thicker than 3/4", 1" min. penetration into rim is required.
9 Value based on 2018 AWC NDS Table 12E for light-framed construction.
10 At Delta 0 shearwalls, 2x framing members may be used at all panel joints UNO.
11 LTP4 installed over sheathing shall use 8d common nails (0.131" x 2-1/2") UNO per plan.

SEE SPECS, SCHEDULE, NOTES, AND TYPICAL DETAILS FOR ADD'L REQUIREMENTS

TYPICAL SHEARWALL CALLOUT

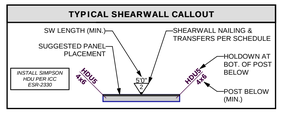

TYPICAL SHEARWALL W / OPENING CALLOUT

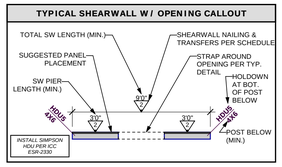

FOUNDATION NOTES

SYMBOL KEY:

- CF# = CONTINUOUS FOOTING OR GRADE BEAM PER SCHED. (SOLID LINE INDICATES **CURB**)
- = CONTINUOUS THICKENED SLAB PER PLAN (SOLID LINE INDICATES **CURB**)
- PF# = PAD FOOTING PER SCHED.
- = 4" SLAB ON GRADE W/ #3 @ 18" O.C. EACH WAY PER TYP. DETAIL
- = SLAB ON GRADE PER PLAN W/ 1.5" DEPRESSION PER PLAN
- = WALL STUDS ABOVE PER SCHEDULE
- = SHEAR WALL ABOVE PER SCHEDULE
- 4x4 = POST ABOVE PER PLAN
- HDU5 4x4 = HOLDOWN AT BOT. OF POST PER PLAN SEE TYP. DETAIL 20/S1.1 FOR FOUNDATION ANCHORAGE, TYP. UNO
- = STEP PER ARCH IN FRAMING OR SLAB

NOTES:

SEE GENERAL NOTES & SPECIFICATIONS FOR ADDITIONAL REQUIREMENTS AND MATERIAL SPECIFICATIONS

SEE S1 SERIES SHEETS FOR TYPICAL DETAILS, TYPICAL DETAILS APPLY THROUGHOUT THIS PLAN UNO

ALL DIMENSIONS PER ARCHITECTURAL PLANS, CONTRACTOR TO VERIFY DIMENSIONS PRIOR TO COMMENCEMENT OF CONSTRUCTION

SEE SOILS REPORT, GENERAL NOTES & SPECS FOR ADDITIONAL REQUIREMENTS AND MATERIAL SPECS

PRIOR TO THE CONTRACTOR REQUESTING A BUILDING DEPARTMENT FOUNDATION INSPECTION, THE SOILS ENGINEER SHALL ADVISE THE BUILDING INSPECTOR IN WRITING THAT:

a) THE BUILDING PAD WAS PREPARED IN ACCORDANCE WITH THE SOILS REPORT,
b) THE UTILITY TRENCHES HAVE BEEN PROPERLY BACKFILLED AND COMPACTED,
c) THE FOUNDATION EXCAVATIONS, THE SOIL'S EXPANSIVE CHARACTERISTICS AND BEARING CAPACITY CONFORM TO THE SOILS REPORT.

PROVIDE WALL-LENGTH, CONTINUOUS, FULL-DEPTH, SOLID BLOCKING (WHERE FLOOR JOISTS ARE PERPENDICULAR) OR DOUBLE FLOOR JOIST (WHERE FLOOR JOISTS ARE PARALLEL), FOR ALL WALLS AT LEVEL ABOVE

CONTINUOUS FOOTING SCHEDULE

MARK	WIDTH (W)	EMBED.[1]	LONGITUDINAL REINF.	TRANSVERSE REINF.	NOTES
CF1	15"	18"	(3) #5, TOP & BOT.	#3 @ 6" OC	SEE DET. 1/S3.1
CF2	15"	18"	(3) #5, TOP & BOT.	#3 @ 6" OC	SEE DET. 2/S3.1
CF3	15"	18"	(3) #5, TOP & BOT.	#3 @ 6" OC	SEE DET. 3/S3.1
CF4	18"	18"	(3) #5, TOP & BOT.	#3 @ 6" OC	SEE DET. 3/S3.1

1 FOUNDATIONS SHALL SATISFY THE MINIMUM REQUIRED EMBEDMENT INTO SUITABLE BEARING SOIL, PER SOILS REPORT.

PAD FOOTING SCHEDULE

MARK	SIZE (W x B)	EMBED.[1]	REINF.	NOTES
PF1	42" x 42"	18"	#4 @ 6" OC BOTTOM	SEE DET. PER PLAN

1 FOUNDATIONS SHALL SATISFY THE MINIMUM REQUIRED EMBEDMENT INTO SUITABLE BEARING SOIL, PER SOILS REPORT.

1 FOUNDATION PLAN

1/8" = 1'-0"

(DSA STAMP AREA)

FINNEY ARCHITECTS
2155 SOUTH BASCOM AVE.
SUITE 250
CAMPBELL, CA 95008
PHONE: 408-398-1450

REGISTERED PROFESSIONAL ENGINEER BRIAN T. DEAN S 6087 STRUCTURAL STATE OF CALIFORNIA
S&S 08/19/26
PRINCIPAL

800.579.3881
www.tsstructural.com
T&S STRUCTURAL
SAN LUIS OBISPO
PASADENA
SANTA BARBARA
NORTHERN CALIFORNIA
HEADQUARTERS:
684 Clarion Court
San Luis Obispo, CA 93401

FOUNDATION PLAN

NEW CLASSROOMS AT
DANA ELEMENTARY SCHOOL
920 W TEFFT STREET, NIPOMO, CALIFORNIA 93444
LUCIA MAR UNIFIED SCHOOL DISTRICT

REVISIONS

NO.	ITEM	DATE
2	ADDENDUM 02	8/19/2026

DRAWN BY: AMB
CHECKED BY: BTD
T&S NO: 240520
PROJECT NO: 24149
DATE: DSA V3 SUBMITTAL: 06-15-26

S2.1

COPYRIGHT © 2024

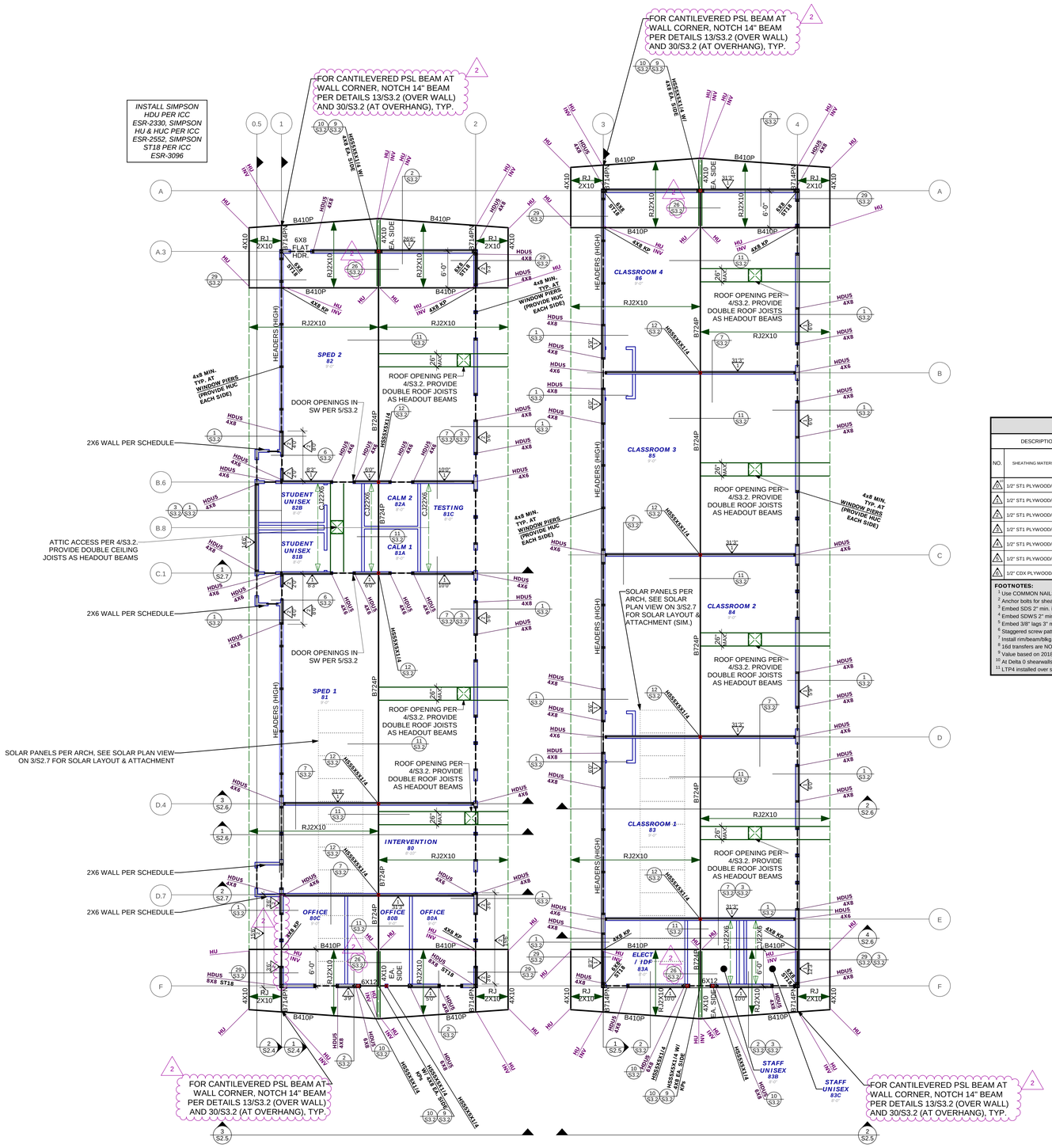

1 ROOF FRAMING PLAN

1/8" = 1'-0"

HDU5 MAY BE SUBSTITUTED WITH HDUE7

SHEATH ALL EXTERIOR NON-SW'S AS 'DELTA 1,' MIN., TYP. PER ARCH.

SHEARWALL SCHEDULE

DESCRIPTION			NAILING[1]		TRANSFER ALTERNATIVES									
NO.	SHEATHING MATERIAL	NO. OF SIDES	SIZE	BOUNDARY SPACING	EDGE SPACING	(2510)[2] 5/8" A.B.	(2506) SDS[3] Screw	(2506) SDWS[4] Screw	-	(3086) LTP4	(3086) LTP5	(3096) A35	-	-	(8/76) 16d Common	VALUE (plf)
							2236	2236	-	3096	3096	ER-110	-	-	-	ICC ESR-1 (LINO)
1/2" ST1 PLYWOOD/OSB	1	10d	6"	6"	48"	9"	12.5"	-	11"	11"	14"	-	-	3"	340
1/2" ST1 PLYWOOD/OSB	1	10d	4"	4"	35"	6"	8"	-	7"	7"	9"	-	-	2"	510
1/2" ST1 PLYWOOD/OSB	1	10d	3"	3"	27"	4"	6"	-	6"	5"	7"	-	-	1.5"	665
1/2" ST1 PLYWOOD/OSB	1	10d	2"	2"	20"	3.5"	4.5"	-	4.5"	4"	5"	-	-	1"	870
1/2" ST1 PLYWOOD/OSB	2	10d	4"	4"	17"	3"	4"	-	4"	3"	4"	-	-	-	1020
1/2" ST1 PLYWOOD/OSB	2	10d	3"	3"	13"	2"	2"	-	3"	2.5"	3"	-	-	-	1330
1/2" CDX PLYWOOD/OSB	2	10d	2"	2"	10"	-	-	-	2"	2"	2"	-	-	-	1740

FOOTNOTES:

1 Use COMMON NAILS ONLY for all sheathing. Field nailing is 12" o.c. Provide 3x framing at all panel joints UNO.
2 Anchor bolts for shearwalls must have 3" x 3" x 0.229" plate washers min., install per 2021 AWC SDPWS 4.3.6.4.3.
3 Embed SDS 2" min. into framing below (min. length is usually 4 1/2" at 2x sills & 6" at 3x sills, V.I.F.). [ICC ESR-2236]
4 Embed SDWS 2" min. into framing below (min. length is usually 5" at 2x sills & 6" at 3x sills, V.I.F.). [APMO ER-192]
5 Embed 3/8" lags 3" min. into framing below per plan (usually 6" lags at 2x sills & 7" lags at 3x sills, V.I.F.).
6 Staggered screw pattern required. Use 4x min. rim/beam/blkg. below as required for 1" edge distance & 1 1/2" spacing between rows.
7 Install rim/beam/blkg. to match full width of top plates, and alternate clips on each side of wall.
8 16d transfers are NOT allowed through 3x sills or sheathing thicker than 3/4". 1" min. penetration into rim is required.
9 Value based on 2018 AWC NDS Table 12E for light-framed construction.
10 At Delta 0 shearwalls, 2x framing members may be used at all panel joints UNO.
11 LTP4 installed over sheathing shall use 8d common nails (0.131"x 2-1/2") UNO per plan.

SEE SPECS, SCHEDULE, NOTES, AND TYPICAL DETAILS FOR ADD'L REQUIREMENTS

TYPICAL SHEARWALL CALLOUT

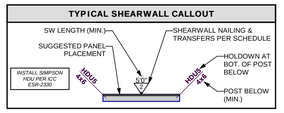

TYPICAL SHEARWALL W/ OPENING CALLOUT

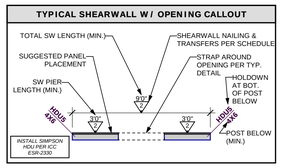

BEAM SCHEDULE

MARK	SIZE	NOTES
B410P	3.5 X 9.25 PSL	GRADE 2.2E
B714PN	7 X 14 PSL	GRADE 2.2E NOTCH BEAM PER PLAN
B724P	7 X 24 PSL	GRADE 2.2E
2X10	2X10 DF#1	-
4X10	4X10 DF#1	-
8X10	8X10 DF#1	-

BEAM SCHEDULE NOTES:
1) FOR DBL OR TRIPLE JOISTS, CONNECT PER TYP. DETAIL.
2) BEAMS SHALL BEAR ON PLATES W/ POST PER PLAN UNO.
3) TOP OF BEAM SHALL BE FLUSH WITH TOP OF JOISTS, UNO. "LOW" INDICATES THAT JOISTS BEAR ON TOP OF BEAM.

DIAPHRAGM SCHEDULE

CONDITION	MIN. SHTG.	NAILS	NAIL SPACING[1]	CONDITION
ROOF	1/2" CDX PL 24/0 (NO OSB)	10d COMMON	6", 6", 12"	BLOCKED

REFER TO TYP. DETAILS FOR TYP. DIAPHRAGM DETAIL
[1]NAIL SPACING OF A",B",C" INDICATES DIAPHRAGM NAILING OF: "A" OC AT BOUNDARIES, B" OC AT CONTINUOUS PANEL EDGES, C" OC FIELD NAILING

FRAMING NOTES

SYMBOL KEY:

- = JOISTS PER PLAN
- = CELING JOISTS PER PLAN
- = BEAM PER PLAN
- = HEADER PER PLAN (INDICATES CONTINUOUS TOP PLATES ABOVE)
- = WALL STUDS BELOW PER SCHEDULE
- = NON-BEARING (PARTITION) WALL STUDS BELOW PER SCHEDULE
- = LOW WALL STUDS BELOW PER SCHEDULE AT CLERESTORY WINDOWS
- = SHEAR WALL BELOW PER SCHEDULE
- 4x4 = POST BELOW PER PLAN
- HDU5 4x4 = HOLDOWN AT BOT. OF POST PER PLAN
- = OPENINGS IN DIAPHRAGM
- = STEP PER ARCH IN FRAMING OR SLAB
- = EXTENT OF ROOF ABOVE UNO
- S# = STRAP PER PLAN
- HSS# = HSS PER SCHEDULE

NOTES:

SEE GENERAL NOTES & SPECIFICATIONS FOR ADDITIONAL REQUIREMENTS AND MATERIAL SPECIFICATIONS

SEE S1 SERIES SHEETS FOR TYPICAL DETAILS, TYPICAL DETAILS APPLY THROUGHOUT THIS PLAN UNO

ALL DIMENSIONS PER ARCHITECTURAL PLANS, CONTRACTOR TO VERIFY DIMENSIONS PRIOR TO COMMENCEMENT OF CONSTRUCTION

PROVIDE WALL-LENGTH, CONTINUOUS, FULL-DEPTH, SOLID BLOCKING (WHERE FLOOR JOISTS ARE PERPENDICULAR) OR DOUBLE FLOOR JOIST (WHERE FLOOR JOISTS ARE PARALLEL), FOR ALL WALLS AT LEVEL ABOVE

FRAMED WALLS SHALL HAVE CONTINUOUS DOUBLE TOP PLATES, SPLICE AS REQUIRED PER TYPICAL DETAILS

BEAMS SHALL BEAR ON PLATES WITH INDICATED POST OR DOUBLE STUD BELOW, UNO

WALL STUD SCHEDULE

LEVEL	EXTERIOR BEARING	INTERIOR BEARING (MIN.)
1ST FLOOR	2X8 @ 16" OC (UNO)	2X6 @ 16" OC (UNO)

- FOR BEARING WALLS, FOLLOW DETAILS PER PLAN.

- FOR NON-BEARING WALLS, STUDS SHALL BE 2X6 @ 16" OC UNO, REFER TO TYP. DETAILS FOR CONNECTIONS AND REQUIREMENTS.

ROOF JOIST SCHEDULE

MARK	JOIST SIZE AND TYPE	SPACING, UNO	HANGER (TYP., UNO)
RJ2X10	2X10 DF#2	@ 16" OC	LUS

-FOR DBL OR TRIPLE JOISTS, CONNECT PER TYP. DETAIL

-PROVIDE WALL-LENGTH, CONTINUOUS, FULL-DEPTH, SOLID BLOCKING (WHERE FLOOR JOISTS ARE PERPENDICULAR) OR DOUBLE FLOOR JOIST (WHERE FLOOR JOISTS ARE PARALLEL) FOR ALL WALLS AT LEVEL ABOVE

-LUS HANGERS PER ICC ESR-2552

CEILING JOIST SCHEDULE

MARK	JOIST SIZE AND TYPE	SPACING, UNO	HANGER (TYP., UNO)
CJ22X6	2-2X6 DF#2	@ 16" OC	LUS

-FOR DBL OR TRIPLE JOISTS, CONNECT PER TYP. DETAIL

-PROVIDE WALL-LENGTH, CONTINUOUS, FULL-DEPTH, SOLID BLOCKING (WHERE FLOOR JOISTS ARE PERPENDICULAR) OR DOUBLE FLOOR JOIST (WHERE FLOOR JOISTS ARE PARALLEL) FOR ALL WALLS AT LEVEL ABOVE

-LUS HANGERS PER ICC ESR-2552

HEADER SCHEDULE

MAX. HDR. SPAN	HEADER (UNO)		TRIMMERS (UNO)	
	2X6 WALL	2X8 WALL	2X6 WALL	2X8 WALL
4'-0"	6X6	PER PLAN	2X6	2X8
6'-0"	6X6	PER PLAN	2X6	2X8
8'-0"	PER PLAN		PER PLAN	

-REFER TO TYP. DETAILS FOR TYP. HEADER CONNECTIONS

-PROVIDE 4X8 MIN POST & HUC PER PLAN WHERE WINDOWS ARE SEPARATED BY 6" WALL PIERS

-SEE DETAIL 20/S3.2 WHERE 6x HEADERS NOTED PER PLAN AT EXTERIOR 8x WALL

-HUC HANGERS PER ICC ESR-2552

TRUE NORTH / REF NORTH

(DSA STAMP AREA)

FINNEY ARCHITECTS
2155 SOUTH BASCOM AVE.
SUITE 250
CAMPBELL, CA 95008
PHONE: 408-398-1450

REGISTERED PROFESSIONAL ENGINEER BRIAN T. DEAN S 6087 STRUCTURAL STATE OF CALIFORNIA
S&S 08/19/26
PRINCIPAL

800.579.3881
www.tsstructural.com
T&S STRUCTURAL
SAN LUIS OBISPO
PASADENA
SANTA BARBARA
NORTHERN CALIFORNIA
HEADQUARTERS:
684 Clarion Court
San Luis Obispo, CA 93401

ROOF FRAMING PLAN

NEW CLASSROOMS AT
DANA ELEMENTARY SCHOOL
920 W TEFFT STREET, NIPOMO, CALIFORNIA 93444
LUCIA MAR UNIFIED SCHOOL DISTRICT

REVISIONS

NO.	ITEM	DATE
2	ADDENDUM 02	8/19/2026

DRAWN BY:	T&S NO:		AMB
CHECKED BY:	240520		BTD
PROJECT NO:		DATE:	
24149	DSA V3 SUBMITTAL: 06-15-26		

S2.3

COPYRIGHT © 2024

NOTE: ALL DIMENSIONS PER ARCHITECTURAL PLANS, CONTRACTOR TO VERIFY DIMENSIONS PRIOR TO COMMENCEMENT OF CONSTRUCTION

INSTALL SIMPSON CMSTC16 PER ICC ESR-2105, SIMPSON MSTA36 PER ICC ESR-3096, SIMPSON HUC PER ICC ESR-2552

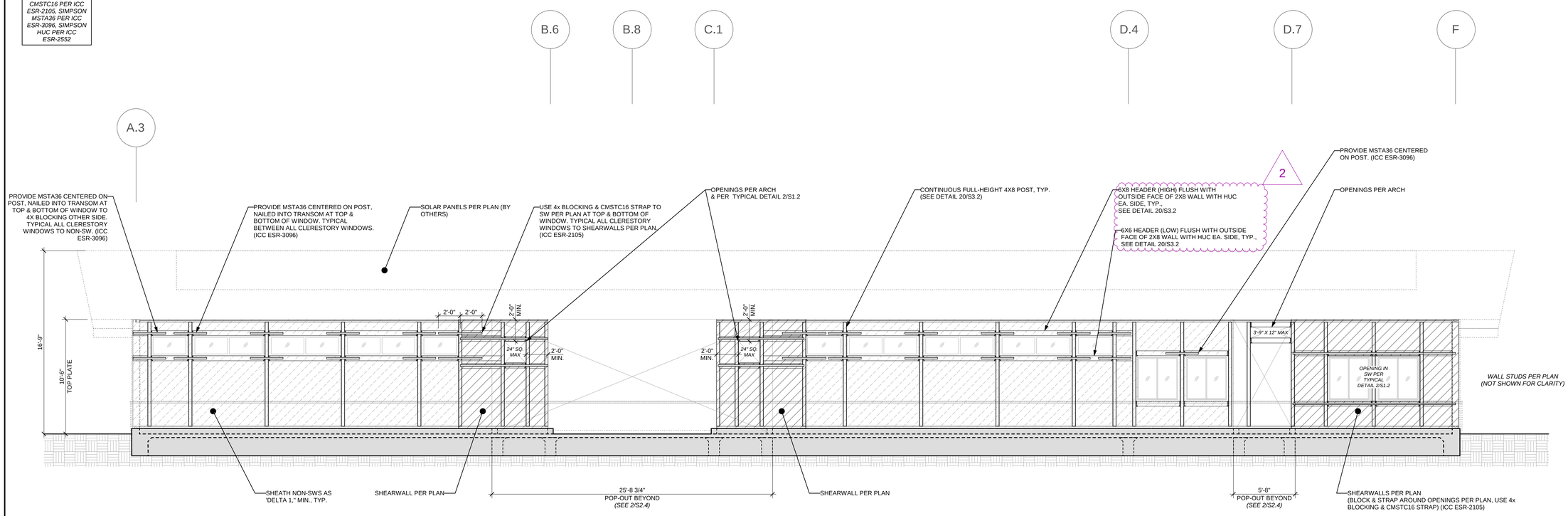

CLASSROOM BLDG 060A

STRUCTURAL ELEVATION AT GRID LINE 1 (CLERESTORY WINDOWS) (1) 08.25.2025 Copyright

NOTE: ALL DIMENSIONS PER ARCHITECTURAL PLANS, CONTRACTOR TO VERIFY DIMENSIONS PRIOR TO COMMENCEMENT OF CONSTRUCTION

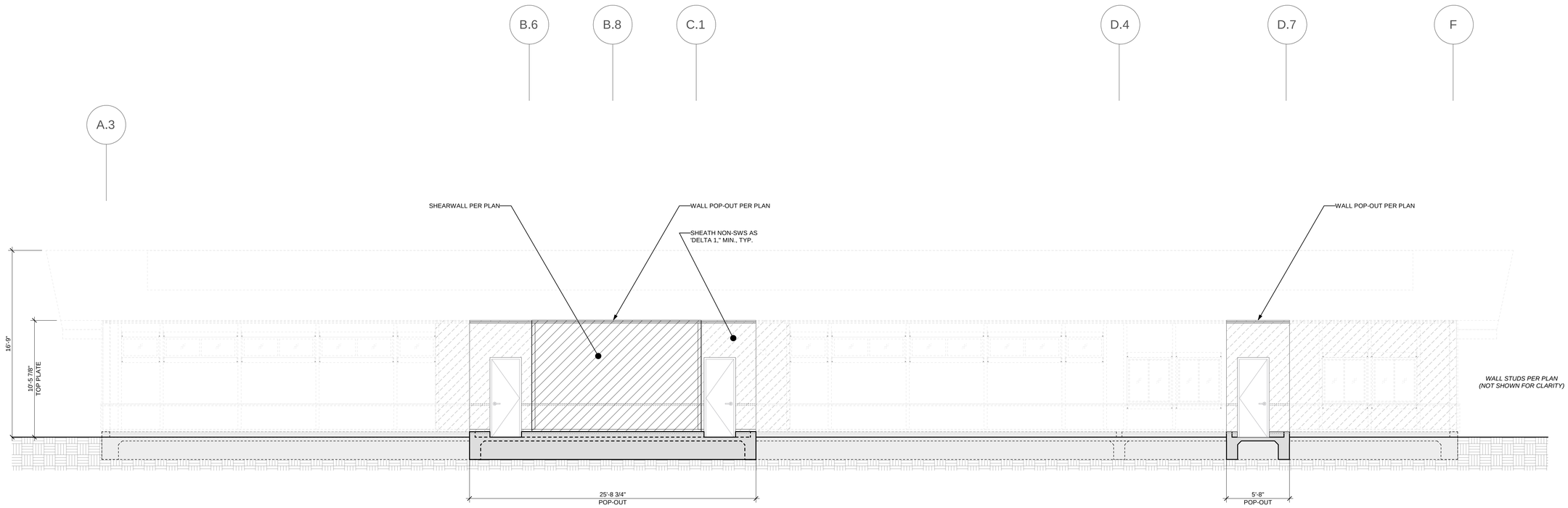

CLASSROOM BLDG 060A

STRUCTURAL ELEVATION AT AT GRID LINE 0.5 (POP-OUTS) (2) 08.25.2025 Copyright

COPYRIGHT © 2024

(DSA STAMP AREA)

FINNEY ARCHITECTS
2155 SOUTH BASCOM AVE.
SUITE 250
CAMPBELL, CA 95008
PHONE: 408-398-1450

REGISTERED PROFESSIONAL ENGINEER BRIAN T. DEAN S 6087 STRUCTURAL STATE OF CALIFORNIA
S&S 08/19/26
PRINCIPAL

800.579.3881
www.tsstructural.com
T&S STRUCTURAL
SAN LUIS OBISPO
PASADENA
SANTA BARBARA
NORTHERN CALIFORNIA
HEADQUARTERS:
684 Clarion Court
San Luis Obispo, CA 93401

STRUCTURAL ELEVATIONS

NEW CLASSROOMS AT
DANA ELEMENTARY SCHOOL
920 W TEFFT STREET, NIPOMO, CALIFORNIA 93444
LUCIA MAR UNIFIED SCHOOL DISTRICT

REVISIONS

NO.	ITEM	DATE
2	ADDENDUM 02	8/19/2026

DRAWN BY:	T&S NO:	AMB
CHECKED BY:	240520	BTD
PROJECT NO:		DATE:
24149	DSA V3 SUBMITTAL:	06-15-26

S2.4

NOTE: ALL DIMENSIONS PER ARCHITECTURAL PLANS, CONTRACTOR TO VERIFY DIMENSIONS PRIOR TO COMMENCEMENT OF CONSTRUCTION

INSTALL SIMPSON CMSTC16 PER ICC ESR-2105, SIMPSON MSTA PER ICC ESR-3096, SIMPSON HUC PER ICC ESR-2552

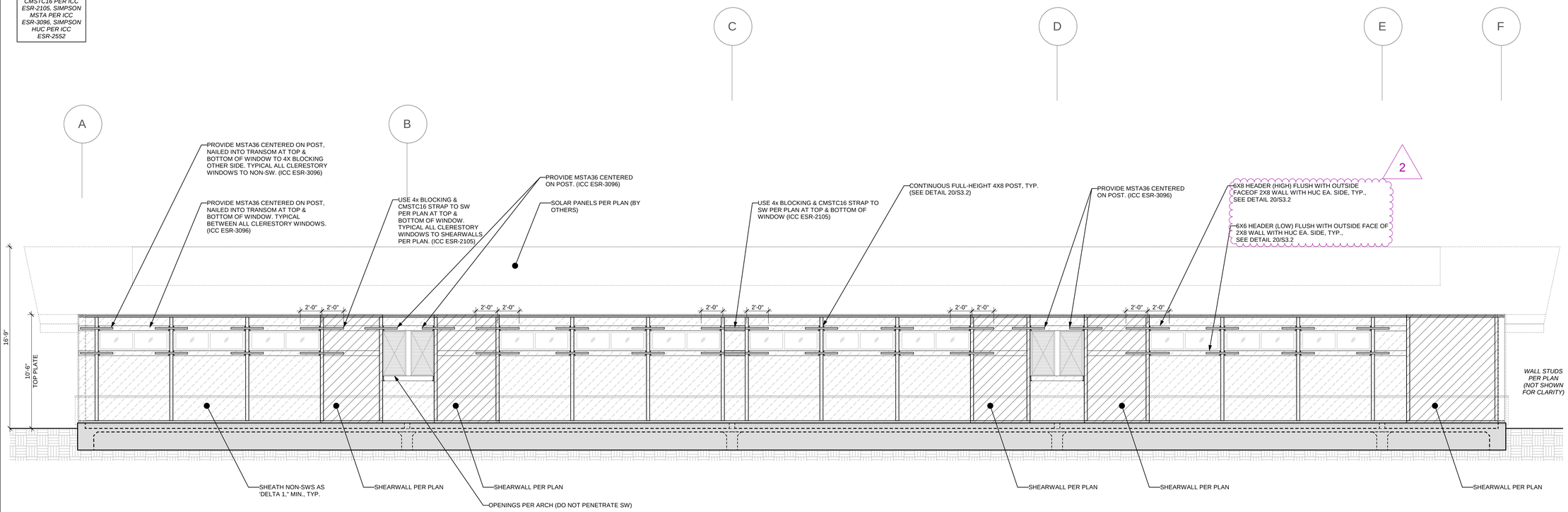

CLASSROOM BLDG 060B

STRUCTURAL ELEVATION AT GRID LINE 3 (CLERESTORY WINDOWS) 1 T&S 2025 Copyright

NOTE: ALL DIMENSIONS PER ARCHITECTURAL PLANS, CONTRACTOR TO VERIFY DIMENSIONS PRIOR TO COMMENCEMENT OF CONSTRUCTION

INSTALL SIMPSON CS14 PER ICC ESR-2105, SIMPSON CCOQ & ECCOQ PER ICC ESR-2604, SIMPSON HUC PER ICC ESR-2552, SIMPSON HGA10 PER ER-112

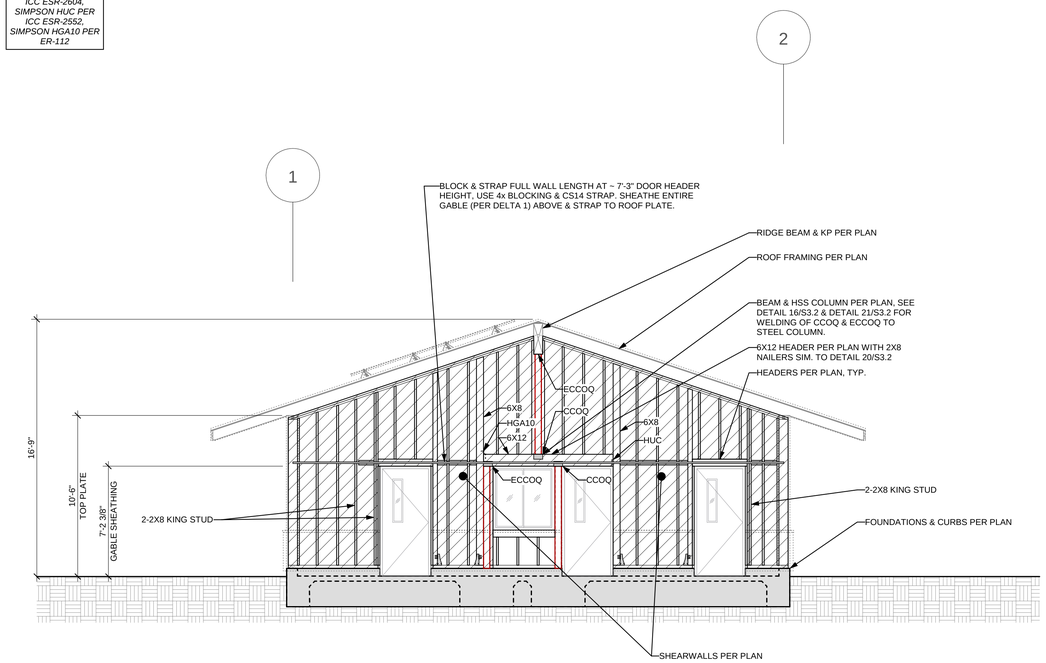

CLASSROOM BLDG 060A

STRUCTURAL ELEVATION AT GRID LINE F (GABLE END) 3 T&S 2025 Copyright

NOTE: ALL DIMENSIONS PER ARCHITECTURAL PLANS, CONTRACTOR TO VERIFY DIMENSIONS PRIOR TO COMMENCEMENT OF CONSTRUCTION

INSTALL SIMPSON CS14 PER ICC ESR-2105, SIMPSON CCOQ & ECCOQ PER ICC ESR-2604, SIMPSON HUC PER ICC ESR-2552, SIMPSON HGA10 PER ER-112

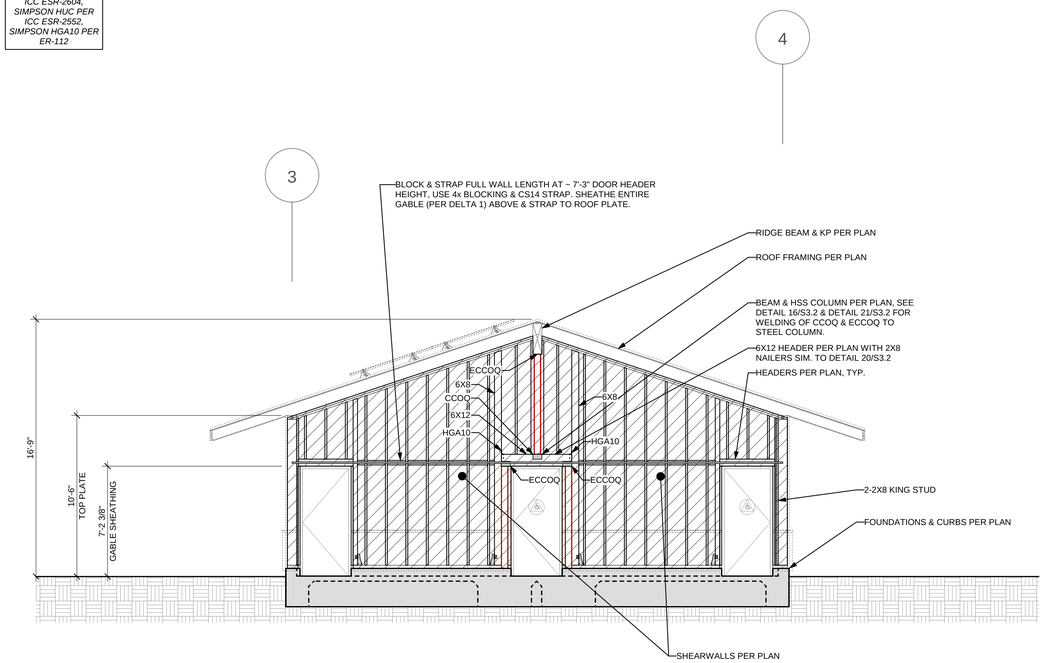

CLASSROOM BLDG 060B

STRUCTURAL ELEVATION AT GRID LINE F (GABLE END) 2 T&S 2025 Copyright

COPYRIGHT © 2024

(DSA STAMP AREA)

FINNEY ARCHITECTS
2155 SOUTH BASCOM AVE.
SUITE 250
CAMPBELL, CA 95008
PHONE: 408-398-1450

REGISTERED PROFESSIONAL ENGINEER BRIAN T. DEAN S 6087 STRUCTURAL STATE OF CALIFORNIA
S&S 08/19/26
PRINCIPAL

800.579.3881
www.tsstructural.com
T&S STRUCTURAL
SAN LUIS OBISPO
PASADENA
SANTA BARBARA
NORTHERN CALIFORNIA
HEADQUARTERS:
684 Clarion Court
San Luis Obispo, CA 93401

STRUCTURAL ELEVATIONS

NEW CLASSROOMS AT
DANA ELEMENTARY SCHOOL
920 W TEFFT STREET, NIPOMO, CALIFORNIA 93444
LUCIA MAR UNIFIED SCHOOL DISTRICT

REVISIONS

NO.	ITEM	DATE
2	ADDENDUM 02	8/19/2026

DRAWN BY:	T&S NO:	AMB
CHECKED BY:	240520	BTD
PROJECT NO:		DATE:
24149	DSA V3 SUBMITTAL:	06-15-26

S2.5

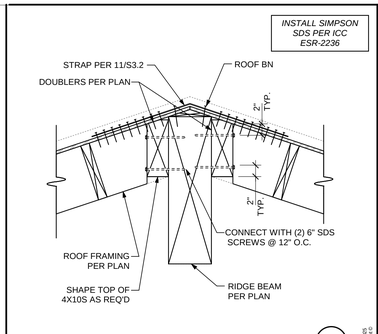

SISTERED RIDGE BEAM 26

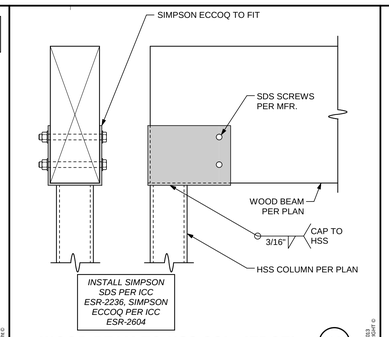

WOOD BEAM TO HSS COL. (EDGE) 21

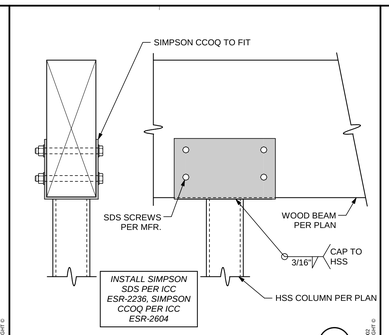

WOOD BEAM TO HSS COLUMN 16

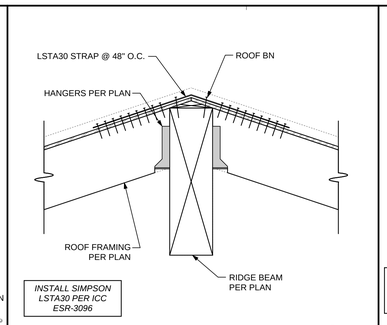

RAFTERS TO FLUSH RIDGE BEAM 11

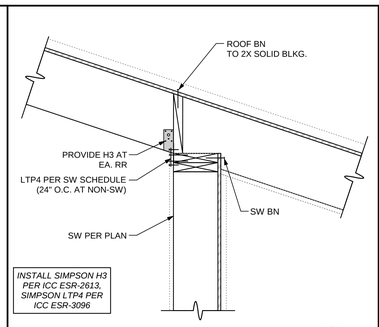

SHEAR TRANSFER TO ROOF 6

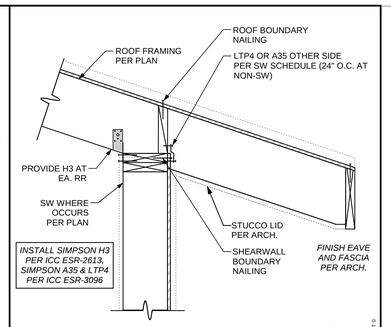

ROOF SHEAR TRANSFER 1

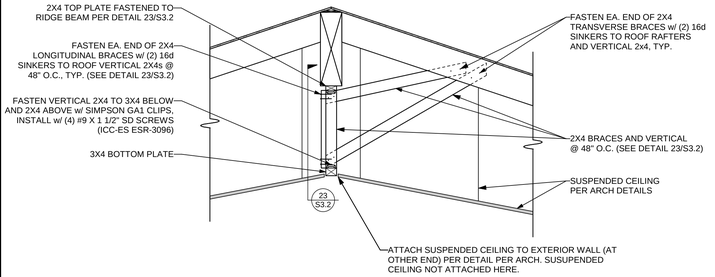

SUSPENDED CEILING BRACING 22

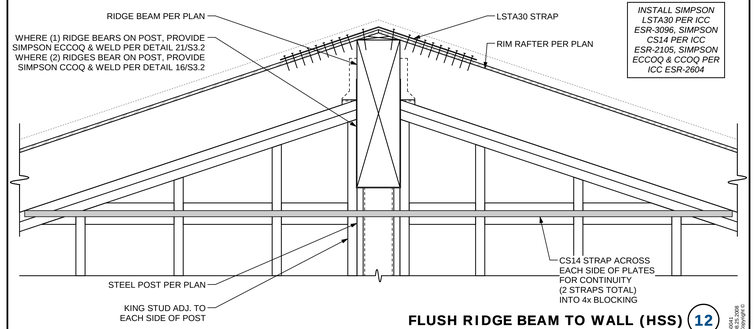

FLUSH RIDGE BEAM TO WALL (HSS) 12

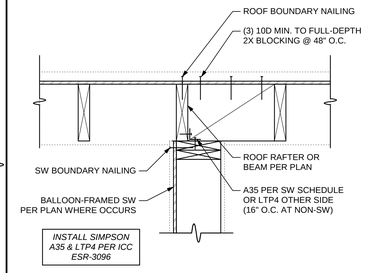

SHEAR TRANSFER TO RAFTERS 7

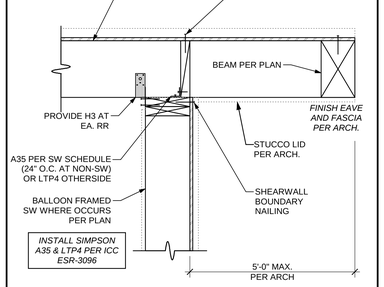

SHEAR TRANSFER AT GABLE END 2

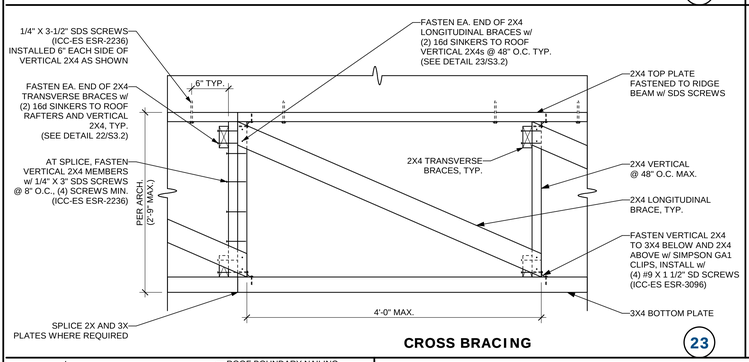

CROSS BRACING 23

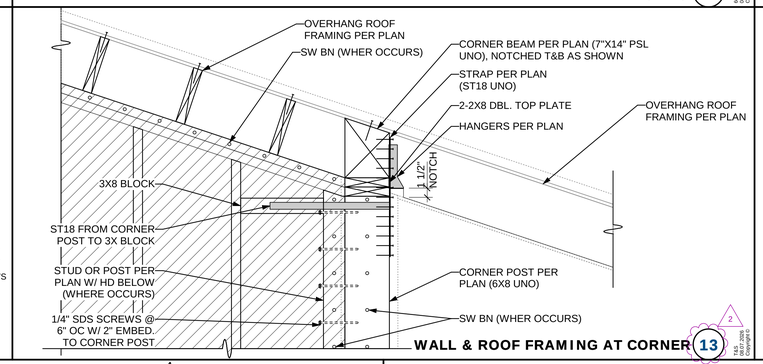

WALL & ROOF FRAMING AT CORNER 13

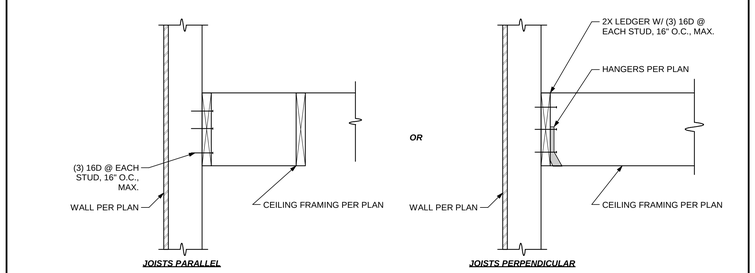

CEILING FRAMING TO WALL 3

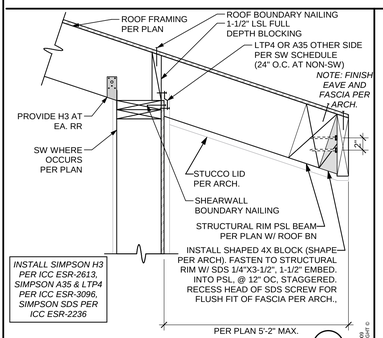

ROOF SHEAR TRANSFER AT PSL 29

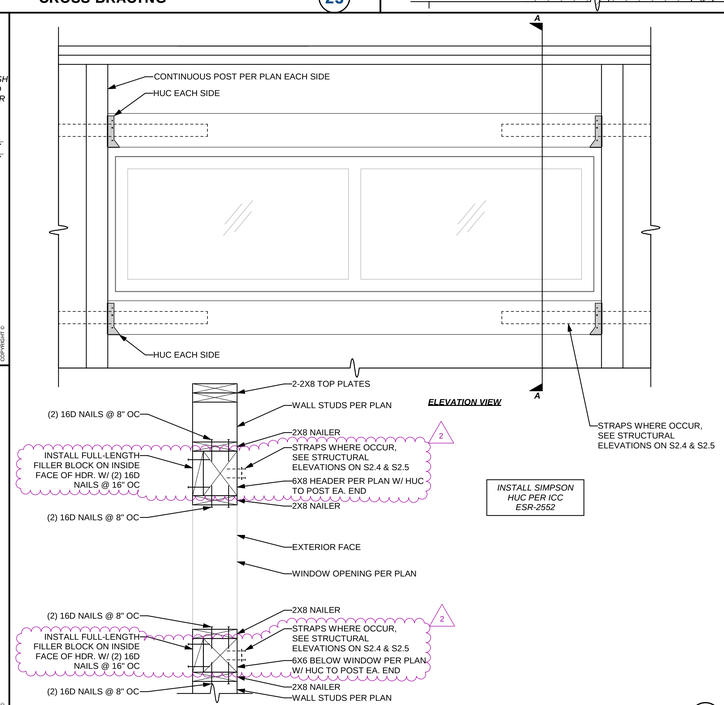

WOOD HEADER IN 8X WALL 20

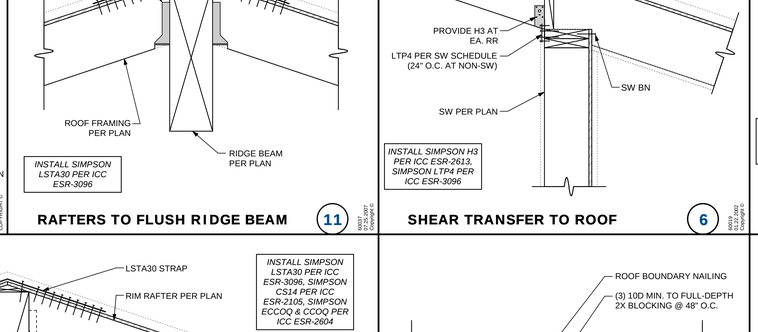

FLUSH RIDGE BEAM TO WALL (HSS) 9

ATTIC ACCESS 4

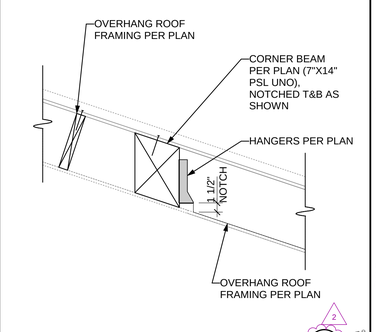

OVERHANG AT PSL 30

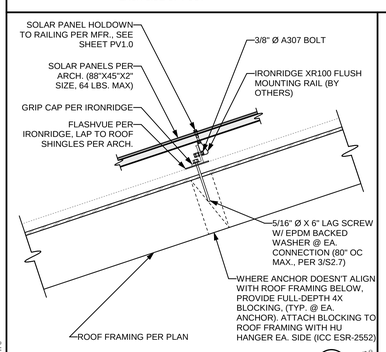

SOLAR PANEL ARRAY ATTACHMENT 15

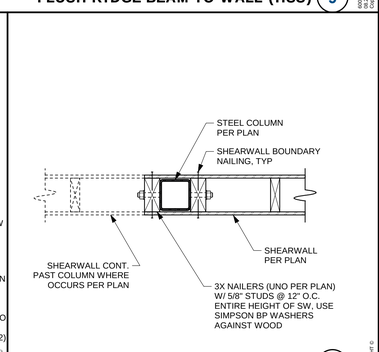

SHEARWALL TO STEEL COLUMN 10

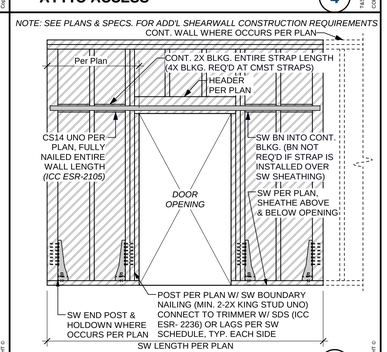

DOOR OPENING IN SHEARWALL 5

(DSA STAMP AREA)

FINNEY ARCHITECTS
2155 SOUTH BASCOM AVE.
SUITE 250
CAMPBELL, CA 95008
PHONE: 408-398-1450

REGISTERED PROFESSIONAL ENGINEER BRIAN T. DEAN S 6087 STRUCTURAL STATE OF CALIFORNIA
S&S 08/19/26
PRINCIPAL

800.579.3881
www.tsstructural.com
T&S STRUCTURAL
SAN LUIS OBISPO
PASADENA
SANTA BARBARA
NORTHERN CALIFORNIA
HEADQUARTERS:
684 Clarion Court
San Luis Obispo, CA 93401

STRUCTURAL DETAILS

NEW CLASSROOMS AT
DANA ELEMENTARY SCHOOL
920 W TEFFT STREET, NIPOMO, CALIFORNIA 93444
LUCIA MAR UNIFIED SCHOOL DISTRICT

REVISIONS

NO.	ITEM	DATE
2	ADDENDUM 02	8/19/2026

DRAWN BY:	T&S NO:	AMB
CHECKED BY:	240520	BTD
PROJECT NO:		DATE:
24149	DSA V3 SUBMITTAL:	06-15-26

S3.2

COPYRIGHT © 2024